CITY OF BRIGHTON
CITY COUNCIL MEETING
CITY HALL
February 5, 2015

Regular Blue Sky: 7:00 p.m.: Review of Agenda Items for this evening's meeting

REGULAR SESSION - 7:30 P.M.

1. Call to order

2. Pledge of Allegiance

3. Roll Call

4. Consider approval of the Agenda

5. Approval of minutes: Regular Meeting and Closed Session of January 15, 2015

6. Call to the Public

Consent Agenda

7. Consider approval of Livingston Educational Service Agency to collect its operating property taxes on the City's Summer 2015 property tax bill

8. Consider approval of staff's Quarterly Investment report

9. Consider approval of the Arts & Culture Commission's recommendation to accept the donation of a sculpture

10. Consider approval of the Mayor's recommended ZBA Alternate appointment

Policy Development & Customer Communications' action item

11. Conduct public hearing for the Yogurtopia Façade Improvement Grant Application as required by MEDC

12. Consider approval of a resolution authorizing the City Manager to submit the final Yogurtopia Façade Improvement project related grant documentation to the MEDC and designate the City Manager to serve as the certifying officer for grant related documents and reports to the MEDC.

13. Conduct interviews of City Council Vacancy Applicants and then consider a motion to approve an appointment to fill the City Council Vacancy and or defer the vote to approve an appointment to the February 19, 2015 City Council Meeting

14. Consider actions as may be recommended by the City Attorney regarding the pending Springhill litigation

15. Consider action as may be recommended by the City Attorney regarding the proposed updated Engineering Standards for the City's development review / approval processes

Other Business

16. Information for City Customers

    a. Report from the City Manager on responses to Citizens Inquiries to City Council received since the last Council Meeting
    b. Progress updates from the City Manager on City Council-adopted goals

17. Receive updates from Council Member Liaisons to other Boards and Commissions

18. Call to the Public

19. Conduct a closed session as may be requested by the City Attorney regarding attorney-client privilege communications

20. Adjournment

MINUTES OF THE MEETING OF THE CITY COUNCIL OF BRIGHTON
HELD ON JANUARY 15, 2015 AT THE BRIGHTON CITY HALL
200 N. 1ST STREET, BRIGHTON, MICHIGAN

BLUE SKY SESSION

The Council conducted a Blue Sky Session at 7:00 p.m. Present were Mayor Muzzin, Mayor Pro-Tem Pipoly, Councilmembers Bohn, Bandkau, Willis and Tobbe. The Council reviewed the agenda items.

REGULAR SESSION

Mayor Muzzin called the regular meeting to order at 7:31 p.m. Following the Pledge of Allegiance, the roll was called. Present were Mayor Muzzin, Mayor Pro-Tem Pipoly, Councilmembers Bandkau, Willis, Tobbe and Bohn. Also in attendance were Attorney Paul Burns and Brad Maynes, Engineer Gary Markstrom, Engineer Kari Jozwik, Staff members Dana Foster, Jennifer Burke, Amy Cyphert, Dave Blackmar, Tom Wightman, Jon Westendorf and an audience of 16. Press and media included Tom Tolen from WHMI.

AGENDA APPROVAL

It was moved by Councilmember Bandkau, seconded by Tobbe to approve the agenda as amended. Add item # 5a, December 18, 2014 Closed Session Minutes. Move from Action Agenda to Consent Agenda item #13, City Council vacancy applications. Move item #14, Springhill Litigation to item #18a, Closed Session. Motion passed 6-0.

MINUTE APPROVAL

It was moved by Councilmember Bohn, seconded by Pipoly to approve the Regular Meeting minutes of December 18, 2014 as presented. Motion passed 5-0-1 with Councilmember Willis abstaining.

It was moved by Councilmember Tobbe, seconded by Pipoly to approve the Closed Session Meeting minutes of December 18, 2014 as presented. Motion passed 5-0-1 with Councilmember Willis abstaining.

JON WESTENDORF PRESENTATION

City Manager, Dana Foster read and presented a Proclamation to Deputy Police Chief, Jon Westendorf recognizing his years of service to the City of Brighton.

Jon Westendorf thanked Council and staff.

CALL TO THE PUBLIC

Mayor Muzzin opened the Call to the Public at 7:56 p.m. The following comment was heard:

Randy Clifton introduced himself as one of the council candidates

Hearing no further comment, Mayor Muzzin closed the Call to the Public at 7:58 p.m.

CONSENT AGENDA

It was moved by Mayor Pro-Tem Pipoly, seconded by Willis to approve the Consent Agenda as presented. Motion passed 6-0.

The following items were approved:

1. Reappointed Linda Botka, Tim Corrigan and Shawn Pipoly to the Downtown Development Authority.

2. Reappointed Kris Tobbe and Claudia Roblee to the Brighton Arts & Culture Commission.

3. Appointed Robert Pawlowski to the joint City of Brighton and Genoa Township Land Transfer Advisory Committee.

4. Set a public hearing date for February 5, 2015 for the Yogurtopia building façade grant project.

5. Approved the conditional site plan for the Tribute Salon and Spa at 401 W. Main Street #14-010 as depicted on plans prepared by Lindhout and Associates, project #1494, sheets A1, last dated 12-12-14 subject to the following:

    1. That all signage comply with applicable ordinances or variances obtained.
    2. That right of way permits are obtained from the Department of Public Services for work within the right of way.
    3. That any damages done to the existing sidewalk be repaired to current condition.

6. Reviewed applications received to date for the City Council vacancy.

CITY OF BRIGHTON ENGINEERING STANDARDS

Planning & Zoning Director Amy Cyphert gave an overview for the need to change the current Engineering standards.

City Engineer, Gary Markstrom, highlighted the changes that were made to the current specifications, stating the last update was from 1996.

It was moved Bohn, seconded by Tobbe to table the updated City of Brighton Engineering Standards for development and infrastructure review and approval. Motion passed 6-0.

CITY CUSTOMER INFORMATION

Utilities Director, Tim Krugh gave a Brighton Lake Road Sewer Repair update.

City Manager, Dana Foster gave an update on Capital Improvements Funding, stating February 5th will be an early blue sky session to discuss Capital Improvements Funding.

Mayor Pro-Tem Pipoly gave a PSD update.

Councilmember Bohn gave a Planning Commission update.

Councilmember Tobbe gave a Brighton Arts & Culture Commission update.

Mayor Muzzin gave a Brighton Area Fire Authority update.

CALL TO THE PUBLIC

Mayor Muzzin gave a Call to the Public at 8:52 p.m. Hearing none, the Call to the Public was closed.

SPRINGHILL PENDING LITIGATION CLOSED SESSION

It was moved by Councilmember Pipoly, seconded by Willis to go into closed session to discuss the pending Springhill litigation pursuant to MCL 15.268(e). A roll call vote was taken. Yes: Bohn, Pipoly, Muzzin, Bandkau, Willis, Tobbe. No: none. Motion passed 6-0.

The Council convened into Closed Session at 8:54 p.m.

The Council reconvened the Regular Session at 9:05 p.m.

ADJOURNMENT

It was moved by Councilmember Pipoly, seconded by Tobbe to adjourn the meeting at 9:05 p.m. Motion passed 6-0.

_____ _____

Jennifer Burke, Deputy City Clerk Jim Muzzin, Mayor

FINANCE POLICY REPORT

Consider a Request from the Livingston Educational Service Agency to Collect all of their Operating Property Taxes on the City's Summer 2015 Tax Bills

January 27, 2015

Prepared by:	Reviewed by:
Kelly Hanna Finance Director	Dana William Foster City Manager

ISSUE:
Consider a Request from the Livingston Educational Service Agency to collect their operating property taxes on the City's Summer 2015 Tax Bills.

STAFF RECOMMENDATION:
It is staff's recommendation to approve the attached request from the Livingston Educational Service Agency (LESA) to collect all of their operating property taxes on the City's Summer 2015 Tax Bills, per the terms and conditions of the attached contractual agreement between the City and Livingston Educational Service Agency (LESA).

BACKGROUND:
State law allows for the City to charge a fee for the collection of school taxes in the summer to recoup the treasury and assessing costs associated with providing this service. It has been determined and agreed to that $3.00 per parcel is an acceptable fee for this service

BUDGET IMPACT:
Of the approximate 4,200 taxable parcels, there are approximately 1,800 parcels (real & personal) in the City, which at $3.00 per parcel will generate $5,400 of revenue for the City's General Fund in FY 2015-16, which will be reflected in the Proposed FY 2015-16 Budget.

RELATIONSHIP TO GOALS:
Related to the City's Previous Goal of Responding to Formal Service Requests through Regional Cooperation.

ACTION/MOTION:
Motion to approve the attached Agreement for Collection of Livingston Education Service Agency Property Taxes.

LESA
Livingston Educational Service Agency

January 22, 2015

Dear Township/City Treasurer,

Please find enclosed the summer Tax Collection Agreement for your signature and board approval if necessary.

Please return the signed agreement as soon as possible, but no later than April 30, 2015.

If you have any questions, please don't hesitate to contact me.

Thank you,

R. Michael Hubert, CPA
Deputy Superintendent
Livingston Educational Service Agency
517-540-6810
mikehubert@livingstonesa.org

enc

SUMMER TAX COLLECTION AGREEMENT

The City of Brighton with offices located at 200 N. First., Brighton, Michigan (the "city") pursuant to 1976 PA 451, as amended, for the purposes of providing for the collection by the City of a summer levy of Livingston Educational Service Agency, Michigan (the "Agency") property taxes for the year 2015 and hereafter as provided below:

The Agency and the City agree as follows:

1. The City agrees to collect 100% of the total millage in the summer as certified by the Agency for levy on all taxable property in addition to and not within the K-12 school district summer tax collection, including principal residence and other exempt property not subject to the 18 mill levy within the Brighton Area Schools.

2. ~~Interest earned on the investment of said taxes collected by the City prior to the payment to the Agency shall be transferred to the Agency when the taxes are transferred to the Agency.~~

3. All interest and penalties, other than collection fees, that are imposed prior to the date the taxes are returned delinquent and that are attributable to school taxes, shall belong to the Agency.

4. The Agency agrees to pay the City costs of assessment and collection at $3.00 per parcel which represents reasonable expenses incurred by the City in assessing and collecting Agency taxes, to the extent that the expenses are in addition to the expenses of assessing and collecting other taxes at the same time.

5. No later than June 15 of each year, the Agency shall certify to the City Treasurer the school millage to be levied on taxable property for summer collection.

6. The City Treasurer shall account for and deliver summer school tax collections to the Agency within ten (10) business days from the 1st and 15th of each month via electronic transfer, if and when possible.

7. In the event that state law is amended necessitating changes to this Agreement, the parties agree to negotiate changes to the Agreement in good faith to conform the Agreement to state law. Collection of summer taxes and payment for said collection shall not be disrupted or delayed due to the negotiation of or revision to this Agreement.

8. By execution of this Agreement, both parties certify and represent that the Agreement is authorized by the laws of the State of Michigan, that the individuals responsible for collecting the Agency taxes are and will be in compliance with all laws pertaining to their duties and responsibilities as a tax collecting agent, and that the signors are authorized by their respective governing bodies to execute this Agreement.

9. This Agreement is effective on the date of its execution and shall expire on June 30, 2016.

IN WITNESS WHEREOF, the parties have executed this Agreement on the respective dates indicated below.

LIVINGSTON EDUCATIONAL SERVICE AGENCY, MICHIGAN

By_____

Its Deputy Superintendent

Dated 1-22-15

CITY OF BRIGHTON: _____

By_____

Its_____

Dated_____

MEMORANDUM

To: Dana Foster, City Manager

From: Kelly Hanna, Finance Director

Date: January 27, 2015

Subject: **The City's Quarterly Investment Report as of December 31, 2014**

Attached you will find the City's Quarterly Investment Report as of December 31, 2014.

In comparison to the quarter ended September 30, 2014, the City's total investment/bank balance has decreased by $30,988 or less than 1% to $7,706,795, which is generally indicative of the fact that the majority of the City's tax revenue levied is collected in the first quarter of the fiscal year, while expenditures are relatively more constant throughout the year. In comparison to the same quarter a year ago, i.e., the quarter ended December 31, 2013, the City's total investment/bank balance has increased by $405,457 or 6%. This is reflective of the recent loan proceeds and tax collections that were received at the end of December and remitted to other taxing jurisdictions in January as required.

In comparison to the quarter ended September 30, 2014, the City's average rate of return on investments increased from 0.52% to 0.54%. The increase is reflective of additional CD holdings and an increase in fund's held in the Flagstar accounts. The City continues to earn more than the benchmark 3-month Treasury Bill Rate and Fed Funds Rate.

Since September 30, 2014, the City's investment in FDIC insured CD's decreased by $148,349. The City's deposits/investments with Flagstar Bank totaled approximately $2,674,901 or approximately 35% of the City's overall portfolio.

Attached you will find a quarterly investment report per the Adopted Investment Policy (also attached). We continue to work within the primary objectives of the City's Investment Policy, which, in priority order, are; safety, liquidity and return on investment.

Let me know if you have any questions.

MEMO

To: City Council
From: Kelly Hanna, Finance Director
Subject: Quarterly Investment Report
Date: January 23, 2015

The City of Brighton currently has 11 certificates of deposits with various Michigan banks with a 12-month maturity or less. There were no certificates of deposit purchased this quarter. We will continue to review keeping our funds liquid vs. the lower rate of return from pooled money market accounts.

The interest rates of these outstanding certificates range from .35% to a maximum of .85% and will vary in amounts from $150,000 to $251,755. Laddering the investments out provides an on-going steady interest income, which is additional revenue to the City budget. This also protects the interest revenue from market declines in the money market accounts. The general fund currently holds 8 CD's in the amount of $2,002,913 which is from the tax revenue received from the tax bills due August 15 of each year. The Utilities fund currently holds 2 CD's in the amount of $301,487. The Utilities Reserve fund holds 1 CD in the amount of $250,000.00.

Our current financial institutions, which we hold money market accounts with, are providing .13% to .85% interest rates on 67% of our total investments. These funds are completely liquid in nature and are available to use on demand. Certificates of Deposit require a penalty in interest; normally one month is forfeited, if they are needed prior to their maturity. Municipalities are allowed to only use Michigan banks for investment purposes.

Michigan gained 44,000 jobs last year and its unemployment rate ended 2014 with a drop to 6.3 percent in December – signs that the state's recovery from the Great Recession of five years ago has finally accelerated. The drop brought the state's rate to the lowest it has been since 6.2 percent in November 2002. Economists have generally predicted continuing increases in job creation this year and next as auto sales remain strong, gasoline prices low, and interest rates remain at historic low points. Michigan continued to display an improving labor market in 2014. Payroll jobs advanced for the fourth consecutive year while the state's unemployment rate continued to trend downward. The state's labor market was particularly strong in the second half of 2014.

Nationally, payroll job gains were 252,000 in December and were widespread across industries. For all of 2014 job growth was 2.95 million, or an average of 246,000 per month. This was the best year for job growth since 1999. The national unemployment rate fell to 5.6 percent in December from 5.8 percent in November, although most of the decline was due to a contraction in the labor force. The major disappointment in the December jobs report was wages; average hourly earnings fell 0.2 percent over the month, and the promising 0.4 percent gain in November was revised down to a 0.2 percent increase. Average hourly earnings were up 1.7 percent in December from one year earlier, barely outpacing inflation.

Federal Reserve officials saw economic turbulence abroad as a significant risk to the U.S. economy when they met in December, but they looked past those concerns in part because they expect policy makers abroad to respond with new growth-inducing measures, minutes of the Fed's Dec. 16-17 policy meeting showed.

Despite concerns about slow growth abroad--and the uncertain implications of sharp declines in global oil prices--Fed officials decided at the meeting to signal that U.S. interest rates are likely to rise in 2015.

The housing recovery, which has been soft, should pick up steam in 2015. Mortgage rates remain near historic lows, loans are becoming easier to obtain, and the Obama administration has loosened some lending restrictions. The solid labor market recovery will boost confidence and spur housing demand. Also, the drag from government tax increases and spending cuts has faded as the improving economy has reduced the need for deficit reduction. The biggest concern is the global economy. Europe is again flirting with recession, the Japanese economy is contracting, and growth in China has slowed dramatically. But global growth should pick up later this year as foreign central banks remain aggressive and most overseas economies benefit from lower energy prices. The strong internal fundamentals of the U.S. economy should prevail, more than offsetting the drag from abroad. Thus, the U.S. economy will benefit mostly from a "home-grown" expansion within our borders, according to the PNC Economic Insights.

CITY OF BRIGHTON
QUARTERLY INVESTMENT REPORT
AS OF DEC 31, 2014

Investment Account	Account Balance	Maturity Date	Current % Interest Rate	Average R.O.R.
TALMER WEST-Juvenile	931.21	Immediate	0.00%	0.00%
TALMER WEST-Tax account	184.23	Immediate	0.13%	0.00%
Total Michigan Commerce Bank	1,115.44			
1ST NATIONAL BANK	137,239.28	Immediate	0.15%	0.00%
Total 1st National Bank	137,239.28			
LEVEL 1-money market	324,750.63	Immediate	0.25%	0.01%
LEVEL 1-U/B	156,889.31	Immediate	0.00%	0.00%
Total Level 1	481,639.94			
LOTUS BANK-money market	203,590.98	Immediate	0.40%	0.01%
Total Lotus Bank	203,590.98			
FIRST NATIONAL BANK OF AMERICA	229,822.53	Immediate	0.50%	0.01%
Total First National Bank of America	229,822.53			
FIRST MERIT - Money Market	219,627.15	Immediate	0.10%	0.00%
Total Bank of Birmingham	219,627.15			
FLAGSTAR BANK-Refundable Deposit	100,145.23	Immediate	0.45%	0.01%
FLAGSTAR BANK-Combined Savings	2,174,418.64	Immediate	0.55%	0.16%
FLAGSTAR BANK-Flexible Spending	10,130.38	Immediate	0.35%	0.00%
FLAGSTAR BANK-A/P Checking	390,207.16	Immediate	0.40%	0.02%
Total Flagstar Bank	2,674,901.41			
CD-CHIEF FINANCIAL CREDIT UNION	250,711.03	8/27/2015	0.85%	0.03%
CHIEF FINANCIAL CREDIT UNION-money market	852,460.76	Immediate	1.00%	0.11%
Total Chief Financial Credit Union	1,103,171.79			
HUNTINGTON BANK-money market	351,998.08	Immediate	0.30%	0.01%
Total Huntington National Bank	351,998.08			
CD-ANN ARBOR STATE BANK	250,000.00	3/4/2015	0.80%	0.03%
CD-TALMER BANK & TRUST	250,000.00	2/4/2015	0.40%	0.01%
CD-TALMER BANK & TRUST	250,000.00	4/1/2015	0.35%	0.01%
CD-THE STATE BANK	251,754.60	9/11/2015	0.75%	0.02%
CD-HURON VALLEY STATE BANK	250,447.22	8/15/2015	0.70%	0.02%
CD-THE PRIVATE BANK	250,000.00	7/30/2015	0.61%	0.02%
CD-MERCANTILE BANK	250,000.00	5/13/2015	0.50%	0.02%
CD-MERCANTILE BANK	250,000.00	6/10/2015	0.50%	0.02%
CD-MERCANTILE BANK	150,000.00	5/27/2015	0.50%	0.01%
CD-THE PRIVATE BANK	151,486.88	3/18/2015	0.46%	0.01%
Total Certificate of Deposits	2,303,688.70			
TOTAL	7,706,795.30		10.75%	0.544%

Three Month Treasury Bill Rate*	0.0291%
Average Fed Funds Rate**	0.1209%
City's Avg. R.O.R. over/(under) the 3-month T-Bill Rate	0.51%
City's Avg. R.O.R. over/(under) the Avg. Fed Funds Rate	0.42%

* From the website below
http://www.treasury.gov/resource-center/data-chart-center/interest-rates/Pages/TextView.aspx?data=yieldYear&year=2014
** From the website below
http://app.ny.frb.org/markets/omo/dmm/fedfundsdataprint.cfm

CITY OF BRIGHTON
INVESTMENT POLICY
Adopted 10/6/11

It is the policy of the City of Brighton to invest its public funds in a manner that will provide the highest investment return within the guidelines of maximum security and optimal liquidity while conforming to all State of Michigan statutes governing the investment of public funds.

Scope:

This investment policy applies to all financial assets of the City. These funds are accounted for in the City's Comprehensive Annual Financial Report and include the:

- **General Fund**
- **Special Revenue Funds**
- **Debt Service Funds**
- **Capital Project Funds**
- **Enterprise Funds**
- **Trust & Agency Funds**
- **Component Units**
- **Any New Fund or Component Unit Created by the City Council, Unless Specifically Exempted**

Prudence:

Investments shall be made with judgment and care--under circumstances then prevailing--which persons of prudence, discretion and intelligence exercise in the management of their own affairs, not for speculation, but for investment, considering the probable safety of their capital as well as the probable income to be derived.

The standard of prudence to be used by the City Treasurer shall be the "prudent person" standard and shall be applied in the context of managing an overall portfolio. The City Treasurer acting in accordance with written procedures and the investment policy and exercising due diligence shall be relieved of personal responsibility for an individual security's risk or market price changes.

Objective:

The primary objectives, in priority order, of the City's investment activities shall be:

1. Safety/Diversification - Safety of principal is the foremost objective of the investment program. Investments of the City shall be undertaken in a manner that seeks to ensure the preservation of capital in the overall portfolio. To obtain this objective, diversification is required in order that potential losses on individual securities do not exceed the income generated from the remainder of the portfolio.

2. Liquidity - The City's investment portfolio will remain sufficiently liquid to enable the City to meet all operating requirements which might be reasonably anticipated.

3. Return on Investment - The City's investment portfolio shall be designed with the objective of attaining a market rate of return throughout the budgetary and economic cycles, taking into account the City's investment risk constraints and the cash flow characteristics of the portfolio.

Delegation of Authority:

The City Treasurer's authority to manage the City's investment program is derived from the City Charter and Ordinances. The City Treasurer shall establish written procedures for the operation of the investment program consistent with this investment policy. Procedures should include reference to: safekeeping, PSA repurchase agreements, wire transfer agreements, depository agreements and banking service contracts. Such procedures shall include explicit delegation of investment implementation responsibility to the City's designated employees and financial institutions. No person may engage in an investment transaction except as provided under the terms of this policy and the procedures established by the City Treasurer. The City Treasurer shall be responsible for all investment transactions undertaken and shall establish a system of controls to regulate the activities of the authorized financial institutions to ensure that they are in compliance with this policy.

Ethics and Conflicts of Interest:

All City and financial institution employees involved in the investment process shall refrain from personal business activity that could conflict with proper execution of the investment program, or which could impair their ability to make impartial investment decisions. City employees involved in the investment process shall disclose to the City Manager any material financial interests in any financial institution that conducts business with the City, and they shall further disclose any large personal financial/investment positions that could be related to the performance of the City's portfolio. City employees involved in the investment process shall subordinate their personal investment transactions to those of the City, particularly with regard to the timing of purchases and sales.

Authorized Financial Institutions:

The City Treasurer will maintain a list of financial institutions authorized to provide investment services. No City deposit shall be made except in a qualified financial institution as established by State of Michigan law. These may include "primary" dealers or regional dealers that qualify under Securities & Exchange Commission Rule 15C3-1 (uniform net capital rule). All financial institutions and brokers/dealers who desire to become qualified bidders for investment transactions must supply the City Treasurer with audited financial statements and certification of having read the City's investment policy and depository contracts. The Treasurer for all current financial institutions used by the City will conduct a quarterly review of the FDIC Insurance Certification and Financial Report 10. A current audited financial statement is required to be on file for each financial institution in which the City invests.

No City investment should be made in financial institutions with a Bauer Rating of less than 3 stars unless the investment has been backed with collateral to 102% or the Investment is 100% FDIC Insured.

<u>Authorized & Suitable Investments:</u>
Pursuant to the authority granted to the City of Brighton by Act 20 of the Public Acts of 1943 as amended by Act 217 of Public Acts of 1982 and Act 196 of Public Acts of 1997, and the standards established by the City Treasurer, the City approves the following investment instruments for use:

a. U.S. Treasury securities;
b. Bonds or other direct short-term obligations of U.S. government agencies and instrumentalities for which principal and interest payments are guaranteed by the U.S. government and are approved for investment purposes by the City Treasurer;
c. Certificates of deposits at commercial banks, savings and loan associations and credit unions which are members of Federal Insurance programs;
d. A-1/P-1, A-2/P-2 rated commercial paper secured by an irrevocable line of credit or collateralized by government securities;
e. Banker's acceptances issued by the ten largest domestic banks, provided the City Treasurer approves collateral;
f. Repurchase agreements collateralized by U.S. Treasury securities (market to market), with a Master Repurchase Agreement signed with the financial institution;
g. Money market funds whose portfolios consist of government securities which are legal for direct investment by local units of government in the State of Michigan, with any investments in mutual funds limited to securities whose intention is to maintain a net asset value of $1 per share;
h. Government short-term investment trust funds, i.e., investment pool fund (as established by Act 367 of 1982).
i. Certificate of Deposit Account Registry Service (CDARS)

<u>Maturity:</u>
Surplus monies of the City on deposit with financial institutions, as determined by the City, shall be invested by financial institutions with maturities scheduled to coincide with projected cash flow needs, taking into consideration large routine expenditures (payroll, accounts payable, bond payments) and sizable blocks of anticipated revenue (property taxes, state shared revenue).

<u>Diversification by Institution</u>
Holdings at any given financial institution shall not exceed one percent of the institution's net equity capital.

<u>Safekeeping and Custody:</u>
To protect against potential fraud and embezzlement, all security transactions, including collateral for repurchase agreements, entered into by the City shall be conducted on a delivery-versus-payment (DVP) basis. A third party custodian designated by the City Treasurer and evidenced by safekeeping receipts will hold

securities. For purposes of this policy, third party shall be defined as a separate financial institution or a separate and distinct division or department of the same financial institution whose function is safekeeping and/or trust activities.

Internal Control:

The City Treasurer shall establish an annual process of independent review by an external auditor. This review will provide internal control by assuring compliance with policies and procedures.

Performance Standards:

The investment portfolio will be designed to obtain a market average rate of return during budgetary and economic cycles, taking into account the City's investment risk constraints and cash flow needs. The basis to be used by the City Treasurer to determine whether market yields are being achieved shall be the three month U.S. Treasury Bill and the average Federal Funds rate. The City Treasurer is charged with the responsibility of including a market report on investment activity and returns in the City's Comprehensive Annual Financial Report.

Savings Clause:

In the event any state or federal legislation or regulation should further restrict instruments or institutions authorized by this policy, such restrictions shall be deemed to be immediately incorporated in this policy. If new legislation or regulation should liberalize the permitted instruments or institutions, such changes shall be available and included in this policy only after written notification to the City Council.

Reporting:

The Treasurer shall provide the City Council quarterly investment reports, which provide a clear picture of the status of the current investment portfolio. The management report should include comments on the current economic conditions, possible changes in the portfolio structure going forward and thoughts on investment strategies. Schedules in the quarterly report should include the following:

1. **A listing of individual securities held at the end of the reporting period by authorized investment category.**
2. **Average life and final maturity of all investments listed.**
3. **Coupon, discount or earnings rate.**
4. **Average Treasury Bill Rate and Average Federal Funds Rate**
5. **Average rate of return on total city portfolio at report date.**

Investment Policy Adoption:

The City's investment policy shall be adopted by resolution of the City Council. The policy shall be reviewed on an annual basis and any modifications made thereto must be approved by the City Council.

Acknowledgment/Agreement:

I have read and fully understand Act 20 PA 1943, as amended, and the Invest Policy of the City of Brighton. Any investment advice or recommendation given by _____, representing _____, to the City of Brighton shall comply w ith the requirements of Act 20 PA 1943, as amended, and the Investment Policy of the Ci ty of Brighton. Any existing investment not conforming to the statute or the policy will be disclosed promptly.

By:

Title:

Date:

GLOSSARY

AGENCIES: Federal agency securities and/or Government-sponsored enterprises.

ASKED: The price at which securities are offered.

BANKERS' ACCEPTANCE (BA): A draft or bill or exchange accepted by a bank or trust company. The accepting institution guarantees payment of the bill, as well as the issuer.

BAUER FINANCIAL RATING: An independent bank rating institution, which analyzes the performance of U.S. banks and credit unions since 1983.

BENCHMARK: A comparative base for measuring the performance or risk tolerance of the investment portfolio. A benchmark should represent a close correlation to the level of risk and the average duration of the portfolio's investments.

BID: The price offered by a buyer of securities. (When you are selling securities, you ask for a bid.) See Offer.

BROKER: A broker brings buyers and sellers together for a commission**.**

CERTIFICATE OF DEPOSIT (CD): A time deposit with a specific maturity evidenced by a Certificate. Large-denomination CD's are typically negotiable**.**

CERTIFICATE OF DEPOSIT ACCOUNT REGISTRY SERVICE (CDARS) – An investment similar to a certificate of deposit (CD), however, with CDARS, the municipality would sign one agreement with a participating financial institution, earn one interest rate per maturity, and receive on regular statement. All deposits, even greater than $250,000, is FDIC insured.

COLLATERAL: Securities, evidence of deposit or other property, which a borrower pledges to secure repayment of a loan. Also refers to securities pledged by a bank to secure deposits of public monies.

COMPREHENSIVE ANNUAL FINANCIAL REPORT (CAFR): The official audited annual financial report. It includes five combined statements for each individual fund and account group prepared in conformity with GAAP. It also includes supporting schedules necessary to demonstrate compliance with finance-related legal and contractual provisions, extensive introductory material, and a detailed Statistical Section.

COUPON: (a) The annual rate of interest that a bond's issuer promises to pay the bondholder on the bond's face value. (b) A certificate attached to a bond evidencing interest due on a payment date.

DEALER: A dealer, as opposed to a broker, acts as a principal in all transactions, buying and selling for his own account.

DISCOUNT: The difference between the cost price of a security and its maturity when quoted at lower than face value. A security selling below original offering price shortly after sale also is considered to be at a discount.

DISCOUNT SECURITIES: Non-interest bearing m oney m arket instrum ents that are issued at a discount and redeemed at maturity for full face value, e.g., U.S. Treasury Bills.

DIVERSIFICATION: Dividing investment funds among a variety of securities offering independent returns.

FEDERAL CREDIT AGENCIES: Agencies of the Federal government set up to supply credit to various classes of institutions and individuals, *e.g.,* Savings & Loan's, small business firms, students, farmers, farm cooperatives, and exporters.

FEDERAL DEPOSIT INSURANCE CORPORATION (FDIC): A federal agency that insures bank deposits, currently up to $250,000 per deposit.

FEDERAL FUNDS RATE: The rate of interest at which Fed funds are traded. The Federal Reserve through open-market operations currently pegs this rate.

FEDERAL HOME LOAN BANKS (FHLB): Government sponsored wholesale banks (currently 12 regional banks), which lend funds and provide correspondent banking services to member commercial banks, thrift institutions, credit unions and insurance companies. The mission of the FHLBs is to liquefy the housing related assets of its members who must purchase stock in their district Bank.

FEDERAL NATIONAL MORTGAGE ASSOCIATION (FNMA): FNMA, Like GNMA (Government National Mortgage Association) was chartered under the Federal National Mortgage Association Act in 1938. FNMA is a federal corporation working under the auspices of the Department of Housing and Urban Development (HUD). It is the largest single provider of residential mortgage funds in the United States. Fannie Mae, as the corporation is called, is a private stockholder-owned corporation. The corporation's purchases include a variety of adjustable mortgages and second loans, in additional to fixed-rate mortgages. FNMA's securities are also highly liquid and are widely accepted. FNMA assumes and guarantees that all security holders will receive timely payment of principal and interest.

FEDERAL OPEN MARKET COMMITTEE (FOMC): Consists of seven members of the Federal Reserve Board and five of the twelve Federal Reserve Bank Presidents. The President of the New York Federal Reserve Bank is a permanent member, while the other Presidents serve on rotating bases. The Committee periodically meets to set Federal Reserve guidelines regarding purchases and sales of Government Securities in the open market as a means of influencing the volume of bank credit and money.

FEDERAL RESERVE SYSTEM: The central bank of the United States created by Congress and consisting of a seven member Board of Governors in Washington, D. C., 12 regional banks and about 5,700 commercial banks that are members of the system.

GOVERNMENT NATIONAL MORTGAGE ASSOCIATION (GNMA or Ginnie Mae): Securities influencing the volume of bank credit guaranteed by GNMA and issued by mortgage bankers, commercial banks, savings and loan associations, and other institutions. Security holder is protected by full faith and credit of the U.S. Government. The Federal Housing Administration (FHA), Veterans Administration (VA) or Farmers Home Administration (FMHA) mortgages back Ginnie Mae securities. The term "pass-throughs" is often used to describe Ginnie Maes.

IMMEDIATAE FUNDS: Liquid Funds available during the timeframe in which fund balance or working capital is needed to pay demands or claims before the major or significant revenue sources will be received for each respective Fund, as determined by management.

LIQUID FUNDS – Funds that can be converted to cash within 30 days.

LIQUIDITY: A liquid asset is one that can be converted easily and rapidly into cash without a substantial loss of value. In the money market, a security is said to be liquid if the spread between bid and asked prices is narrow and a reasonable size can be done at those quotes.

LOCAL GOVERNMENT INVESTMENT POOL (LGIP): The aggregate of all funds from political subdivisions that are placed in the custody of the State Treasurer for investment and reinvestment.

MARKET VALUE: The price at which a security is trading and could presumably be purchased or sold.

MASTER REPURCHASE AGREEMENT: A written contract covering all future transactions between the parties to repurchase—reverse repurchase agreements that establishes each party's rights in the transactions. A master agreement will often specify, among other things, the right of the buyer-lender to liquidate the underlying securities in the event of default by the seller borrower.

MATURITY: The date upon which the principal or stated value of an investment becomes due and payable.

MONEY MARKET: The market in which short-term debt instruments (bills, commercial paper, bankers' acceptances, etc.) are issued and traded.

OFFER: The price asked by a seller of securities. (W hen you are buying securities, you ask for an offer.) See Asked and Bid.

OPEN MARKET OPERATIONS: Purchases and sales of government and certain other securities in the open market by the New York Federal Reserve Bank as directed by the Federal Open Market Committee in order to influence the volume of money and credit in the economy. Purchases inject reserves into the bank system and stimulate growth of money and credit; sales have the opposite effect. Open market operations are the Federal Reserve's most important and most flexible monetary policy tool.

PORTFOLIO: Collection of securities held by an investor.

PRIMARY DEALER: A group of government securities dealers who submit daily reports of market activity and positions and monthly financial statements to the Federal Reserve Bank of New York and are subject to its informal oversight. Primary dealers include Securities and Exchange Commission (SEC)-registered securities broker-dealers, banks, and a few unregulated firms.

PRUDENT PERSON RULE: An investment standard. In some states the law requires that a fiduciary, such as a trustee, may invest money only in a list of securities selected by the custody state—the so-called legal list. In other states the trustee may invest in a security if it is one which would be bought by a prudent person of discretion and intelligence who is seeking a reasonable income and preservation of capital

QUALIFIED PUBLIC DEPOSITORIES: A financial institution which does not claim exemption from the payment of any sales or compensating use or ad valorem taxes under the laws of this state, which has segregated for the benefit of the commission eligible collateral having a value of not less than its maximum liability and which has been approved by the Public Deposit Protection Commission to hold public deposits.

RATE OF RETURN: The yield obtainable on a security based on its purchase price or its current market price. This may be the amortized yield to maturity on a bond or the current income return.

REPURCHASE AGREEMENT (RP OR REPO): A holder of securities sells these securities to an investor with an agreement to repurchase them at a fixed price on a fixed date. The security "buyer" in effect lends the "seller" money for the period of the agreement, and the terms of the agreement are structured to compensate him for this. Dealers use Repurchase Agreements, it is lending money that is, increasing bank reserves.

SAFEKEEPING: A service to customers rendered by banks for a fee whereby securities and valuables of all types and descriptions are held in the bank's vaults for protection.

SECONDARY MARKET: A market made for the purchase and sale of outstanding issues following the initial distribution.

SECURITIES & EXCHANGE COMMISSION: Agency created by Congress to protect investors in securities transactions by administering securities legislation.

SEC RULE 15C3-1: See Uniform Net Capital Rule.

SURPLUS FUNDS: Liquid or Non-Liquid Funds not immediately needed to pay demands against vendors and other claimants as determined by management.

TREASURY BILLS: A non-interest bearing discount security issued by the U.S. Treasury to finance the national debt. Most bills are issued to mature in three months, six months, or one year.

TREASURY BONDS: Long-term coupon-bearing U.S. Treasury securities issued as direct obligations of the U.S. Government and having initial maturities of more than ten years.

TREASURY NOTES: Medium-term coupon-bearing U.S. Treasury securities issued as direct obligations of the U.S. Government and having initial maturities from two to 10 years.

UNIFORM NET CAPITAL RULE: Securities and Exchange Commission requirement that member firms as well as nonmember broker-dealers in securities maintain a maximum ratio of indebtedness to liquid capital of 15 to 1; also called net capital rule and net capital ratio. Indebtedness covers all money owed to a firm, including margin loans and commitments to purchase securities, one reason new public issues are spread along members of underwriting syndicates. Liquid capital includes cash and assets easily converted into cash.

YIELD: The rate of annual income return on an investment, expressed as a percentage. (a) INCOME YIELD is obtained by dividing the current dollar income by the current market price for the security. (b) NET YIELD or YIELD TO MATURITY is the current income yield minus any premium above par or plus any discount from par in purchase price, with the adjustment spread over the period from the date of purchase to the date of maturity of the bond.

RESOLUTION 11-21 Adopted October 6, 2011

A RESOLUTION ADOPTING AN UPDATED INVESTMENT POLICY FOR THE CITY OF BRIGHTON

WHEREAS, prudent financial management would be well served by the updating of the City's 2002 investment policy by the City Council; and

WHEREAS, the Finance Director has proposed to the City Council an updated policy statement governing the investment of City funds; and

WHEREAS, the Brighton City Council finds the proposed policy changes to be an accurate portrayal of the City Council's objectives and standards as they relate to the City's investments.

NOW, THEREFORE, BE IT RESOLVED by the Brighton City Council as follows:

1. The attached policy statement entitled "Investment Policy" is hereby adopted.
2. Management is hereby directed to implement said policy.

AYES: Schillinger, Cooper, Bohn, Bandkau, Muzzin, Roblee, Pipoly

NAYS: none

ABSTAIN: none

ABSENT: none

This resolution was approved this 6th day of October, 2011.

Diana Lowe

Diana Lowe, City Clerk

I, Diana Lowe, City Clerk, for the City of Brighton for hereby certify that the foregoing is a true and complete copy of a Resolution adopted by the City Council at the Regular Meeting held on October 6, 2011.

Diana Lowe, City Clerk

POLICY REPORT: BRIGHTON ARTS AND CULTURE COMMISSION'S (BACC) RECOMMENDATION TO ACCEPT DONATION OF THE "ELEGANT LADY" SCULPTURE BY KEGHAM TAZIAN

February 5, 2015

Prepared by:	Reviewed by:	Reviewed by:
Lauri French, Deputy Planning & Zoning Director	Matt Modrack, DDA Exec. Dir./Comm. Dev. Director	Dana Foster City Manager

ISSUE:

To consider approval of the Arts and Culture Commission's recommendation to accept the donation of a sculpture from artist Kegham Tazian to be located on the pedestal in front of City Hall.

STAFF RECOMMENDATION:

Staff concurs with the Brighton Arts and Culture Commission's recommendation.

BACKGROUND:

Kegham Tazian has had sculptures in the Brighton Outdoor Sculpture Exhibit since 2009, and "Elegant Lady" was installed in July 2010 on the pedestal near the front door of Brighton City Hall. The sculpture's exhibit was due to end in August 2015, along with three other sculptures. The BACC sent a letter to the four artists in December 2014 to remind them of the upcoming de-installation date and to ask if they would like to submit a replacement sculpture for this year's exhibit. Mr. Tazian contacted Lauri French and offered to donate "Elegant Lady" to the City in consideration for a tax deduction. At their meeting on January 12, 2015, the Brighton Arts and Culture Commission voted to recommend that City Council accept the donation of "Elegant Lady" by Kegham Tazian as a permanent addition to the Outdoor Sculpture Exhibit (page 2 of draft minutes attached).

BUDGET IMPACT: Upon approval of the sculpture donation, Staff will request that it be added to the property covered under the City's insurance policy with Meadowbrook. The BACC will be responsible for future maintenance of the sculpture.

RELATIONSHIP TO 2014/15 GOALS: The recommendation to accept donation of the sculpture for the City's permanent display is not a specific goal for FY 14/15; however, it is consistent with the intent of the Cultural Economic Development portion of the MML's "Eight Assets for a 21st Century Community" previously adopted by City Council.

COUNCIL ACTION:

Motion by _____ and supported by _____ to recommend approval of the Brighton Arts and Culture Commission's recommendation to accept donation of "Elegant Lady" from the artist, Kegham Tazian, for inclusion in the City's permanent Outdoor Sculpture Exhibit.

Attachments:

Draft Arts & Culture Commission meeting minutes from 1/12/15 (page 2)
Bill of Sale from artist Kegham Tazian signed 1/16/15
Photograph of "Elegant Lady"

DRAFT

determined at the February 9, 2015 meeting. **Motion carried 5-0**. Raquel will put together some different colors for the BACC to consider and will participate at the February 9 meeting via Skype.

8. Status of letters to artists for 4 sculptures scheduled to rotate out (Elegant Lady-Tazian, Dancer Two-Piet, Doppelganger-Sauve, Sancho Panza-Cannaert) – Lauri French reported that the letters were sent to the artists and that she has only received a response from Kegham Tazian. He offered to donate Elegant Lady to the City for our permanent collection. Claudia Roblee noted that City Council will have to approve acceptance of this donation, and the BACC members were very appreciative of Mr. Tazian's offer.

   Motion by Kris Tobbe, supported by Mary St. Pierre, to recommend that City Council accept the donation of "Elegant Lady" by Kegham Tazian to the City as a permanent addition to the Outdoor Sculpture Exhibit. **Motion carried 5-0.** Lauri French will prepare the Council policy report and ask that this item be added to the February 5, 2015 Council agenda.

9. Discuss participation in the Grape Tent at the 2015 Fine Art & Acoustic Music Festival – Claudia Roblee noted that we need to find out if the Chamber is going to be doing the Grape Tent at this year's Art Festival and if they know where it will be located. She reminded the BACC members that it has been recommended to the Chamber that the tent be moved next to the Brighton Art Guild's tent since we have had a problem the past two years with having enough people to watch the art in the Grape Tent. Staff was directed to contact Sophia Freni at the Chamber to find out the answers to these questions and report back at the February meeting.

10. Discuss sculpture lighting alternatives for the BACC Sculpture Garden – The information provided by Piet Lindhout regarding the "up lights" to light the four sculptures was briefly discussed. Since we won't be able to do install any lights until spring, it was decided to table this item for further discussion next month.

    Motion by Kris Tobbe, supported by Brenda Ochodnicky, to table discussion of this item until the February 9, 2015 meeting. **Motion carried 5-0.**

Other Business

11. Staff Updates
    a. 2015 DIA Inside|Out Program – Lauri French reviewed the email from Kathryn Dimond that was included in today's packet. Brighton will not be eligible for another Inside|Out exhibit until 2016, and she was directed to send a note to Jillian Reese at the DIA to let her know that we are interested for 2016.

12. Commission Member Updates – None

13. Call to the Public was made at 6:55 p.m. Hearing no response, call to the public was closed.

14. Adjournment

    Motion by MJ Takagi, supported by Brenda Ochodnicky, to adjourn the meeting at 6:55 p.m. **Motion carried 5-0.**

Respectfully submitted,

Lauri French, Deputy Director
Community Development, Planning & Zoning
January 13, 2015

City of Brighton Arts & Culture Commission
2010
Brighton Biennial Sculpture Exhibit
"ELEGANT LADY"
KEGHAM TAZIAN, SCULPTOR

BILL OF SALE

Kegham Tazian ("Seller"), whose address is 27911 Bayberry Rd., Farmington Hills, MI 48331, conveys and warrants to the CITY OF BRIGHTON ("Brighton"), a Michigan municipal corporation, whose address is 200 North First Street, Brighton, Michigan 48116, for good and valuable consideration any and all ownership interest in the artwork known as "Elegant Lady" and more specifically identified in the attached Exhibit A photograph ("Artwork") for the amount of Six Thousand Five Hundred Dollars ($6,500.00).

The parties agree and acknowledge that the Artwork may be used by the City of Brighton, the Principal Shopping District (PSD), and the Brighton Arts and Culture Commission (BACC) for promotional purposes related to any permanent or temporary art exhibit and for the downtown or City in general, including, but not limited to, display, and for creation of images of the Artwork for use in promotional materials and advertising such as e-cards, postcards, tee shirts, posters, display advertisements, and the City and Principal Shopping District websites.

In the event that Brighton no longer desires to permanently display the Artwork in the position indicated as number 2 on the map attached hereto as Exhibit B, all title and rights in the Artwork will revert to Seller.

Seller has knowledge of the facts, that the consideration for the conveyance was actual and adequate and that the same was given in good faith for the purpose herein set forth, and not for the purpose of security or for defrauding creditors of Seller or subsequent purchasers. Seller represents and warrants to Brighton that Seller has marketable title to all ownership interest in the Artwork, free from liens and encumbrances.

Witnessed by:

Vahe Tazian

Dated: 1/16/2015, 2015

KEGHAM TAZIAN

POLICY REPORT – PUBLIC HEARING FOR MEDC GRANT FOR THE YOGURTOPIA BUILDING FAÇADE IMPROVEMENT PROJECT, GRANT NO. MSC 214055-CDF

February 5, 2015

Prepared by:	Reviewed by:	Reviewed by:
Lauri French, Dep. Director, Community Development, Planning and Zoning	Matt Modrack, Exec. Director, DDA/ Comm. Dev. Dir.	Dana Foster City Manager

Request

Hold a public hearing as required by the Michigan Economic Development Corporation (MEDC) guidelines on February 5, 2015 for MEDC grant No. MSC 214055-CDF and approve the accompanying resolution to authorize submittal of the formal grant application.

Background

As Council is aware, the former "Grow Green" building at 332 W. Main Street was recently sold to Yogurtopia Brighton, LLC, who intend to open a yogurt and dessert store at that location in late spring 2015. The site plan for the interior construction and exterior façade was approved by Planning Commission on November 17, 2014 and by City Council on November 20, 2014.

The MEDC has approved a grant in the amount of $76,886 for a façade improvement project at the above address for demolition and construction of new front and rear facades. The grant will be matched with a $144,054 contribution from the owners, Ray Totten and Chuck Reda from Yogurtopia Brighton, LLC for interior renovations of the building. The owners' total investment, including equipment and purchase of the building itself, will be in excess of $500,000. No matching funds will be required by the City or DDA.

The requested public hearing is required by the MEDC in the Part 2, Section 4 – UGLG Public Participation Documents, of the grant application. MEDC review and final approval of the grant application will then result in a formal agreement between the building owner, the City and the MEDC. Interior renovations will begin at the end of February 2015, with exterior façade work starting as soon as weather permits. It is anticipated that construction will be complete by the end of April with the business opening shortly thereafter.

Budget Impact

The local match will be met through the building owners' private contributions for the interior renovation which is estimated at over $200,000 including their equipment investment. The only monetary contribution from the Downtown Development Authority (DDA) was approximately $600 in architectural fees for a third party construction cost estimate required by the MEDC.

Council Action

Hold a public hearing and approve the accompanying resolution for MEDC Grant No. MSC 214055-CDF as required by the Michigan Economic Development Corporation.

Attachments:

- Resolution _____ authorizing submission of the Yogurtopia Building Façade Improvement Project grant application, Project No. MSC 214055-CDF.
- Approved concept sketches of the front and rear facades for 332 W. Main St.

Resolution _____

WHEREAS, the City of Brighton is requesting funding from the Michigan Economic Development Corporation (MEDC) under the Michigan Community Development Block Grant (CDBG) Program in the amount of $76,886, and up to $144,054 in private matching funds from the building owner for façade improvements for a total project cost of $220,940.

WHEREAS, the façade component will be directed to building improvement projects at 332 W. Main St., within the downtown.

WHEREAS, the proposed project is consistent with the local community development plan as described in the Application;

WHEREAS, Yogurtopia Brighton, LLC has estimated that its commercial use will result in a minimum of ten (10) new, permanent, full-time equivalent jobs, of which at least fifty-one percent (51%) will be low and moderate income persons;

WHEREAS, the City of Brighton recognizes that no project costs (CDBG and non-CDBG) will be incurred prior to a formal grant award, completion of the environmental review procedures and formal, written authorization to incur costs is received from the CDBG Project Manager;

WHEREAS, Dana W. Foster, City Manager, is authorized to sign and submit the Michigan CDBG Application and associated documents;

WHEREAS, Dana W. Foster, City Manager, is designated to serve as the City of Brighton's certifying officer for the environmental review;

WHEREAS, Dana W. Foster, City Manager, is authorized to sign the Grant Agreement, all amendments, and grant payment requests; and

WHEREAS, the City of Brighton has completed all public participation requirements in Section 4 of Part 2 of the Application.

NOW, THEREFORE, BE IT RESOLVED, the City Council hereby authorizes submission of the Yogurtopia Building Façade Improvement Project grant application under the MEDC's Community Development Block Grant (CDBG) Program.

Adopted the 5th day of February, 2015 by Council Action.

yogurtopia®
babs
KLEY BOUTIQUE
GREAT GIFTS
For All The Ladies
On Your List...
pink babs
528
hours

yogurtopia®

January 7, 2015

Mr. Dana Foster
City of Brighton
200 North First Street
Brighton, MI 48116

Re: Sanitary Sewer and Water Design Standard Update
Revision Summary for City's Final Approval

Dear Mr. Foster:

Over the past year Tetra Tech has been working closely with the City staff, Fire Department and Michigan Department of Environmental Quality (MDEQ) Sewer and Water Division to update the City's Engineering Land Development Manual that was issued in October 1996. With advances in construction materials and techniques, portions of the 1996 Manual are outdated. Also, the Design Standards and Construction Processes listed in the Manual do not adequately cover the City's current needs.

In response to the City's need to have a reliable Design Manual for developing and/or redeveloping sites the Manual has been enhanced to incorporate the following items:

1. Update the specifications to reflect the new lead limitations for water services based on NSF/ANSI 372.
2. Update all specifications based on the most recent version of the master specification, including all standard industry references.
3. Update the City of Brighton Standard Details and format to a full-size drawing sheet that developers can include in their Site Plan and Construction Plan applications.
4. Improved design standard requirements for Storm Sewers and Storm Water Containment, Site Grading and Soil Erosion Control.
5. Expanded upon design requirements for Municipal Sanitary Sewer Systems and Water Systems.
6. Transformed section on Parking Lot Design to classify design requirements based on traditional, overflow and transitional parking.
7. Enriched the Road Design requirements, including procedural requirements for street lighting, and provided two (2) new sections that differentiated the requirements between Public and Private Road requirements.
8. A new section regarding requirements pertaining to Traffic Impact Studies was added.
9. The section entitled "Construction Process" was significantly modified clarify the construction phase process and requirements including; permitting requirements, inspection and testing responsibilities, escrow requirements, and general pre- and post- Contractor responsibilities. Sections were added identifying when a Contractor can obtain conditional completion, substantial and final completion on residential and commercial projects.
10. A Construction Phase Closure Checklist has been added to the Manual to assist the City in documenting whether new public sanitary sewer and water systems are satisfactorily completed for the City's acceptance.
11. A copy of the MDEQ's recommended permit questionnaire has been included for reference. The questionnaire helps Developers identify necessary permits for the project.

Tetra Tech
123 Brighton Lake Road, Suite 203, Brighton, MI 48116
Tel 810.220.2112 Fax 810.220.0094 www.tetratech.com

Once the Manual has been approved by the City, Tetra Tech will forward final copies of the Manual to the MDEQ for their files, which will allow the standards to be referenced in future sanitary sewer and watermain extension permits. It is also our understanding the City intends to have a pdf of the Manual on the City of Brighton website for public access.

Please call if you have any questions or comments.

Project Engineer

CITY OF BRIGHTON
200 NORTH FIRST STREET
BRIGHTON, MICHIGAN

ENGINEERING

DESIGN STANDARDS

Prepared by:

TETRA TECH
Brighton, Michigan

December 2014

CONTENTS

Page

FORWARD ..... **iv**

GENERAL **1**

PART I. ENGINEERING DESIGN STANDARDS **2**

1.0 STORM WATER MANAGEMENT SYSTEM 2

1.01 Storm Water Procedure for Plan Review 2
1.02 Storm Water Conveyance 2
1.03 Sewer Locations 5
1.04 Detention Basins 5
1.05 Retention Basins 7
1.06 Underground Containment Systems 7

2.0 SITE GRADING AND SOIL EROSION CONTROL 9

2.01 Grading and Soil Erosion/Sedimentation Control Plan 9
2.02 Topographic Plan 9
2.03 Final Grading and Drainage Plan 9
2.04 Soil Erosion and Sedimentation Control Plan 10

3.0 MUNICIPAL SANITARY SEWER SYSTEM 11

3.01 Sanitary Sewer Basis of Design 11
3.02 Sewer Location 12
3.03 Depth of Sewers 12
3.04 Manholes 13
3.05 Service Connections 13
3.06 Wastewater Pump Stations 14
3.07 Pressure Sewers Systems 14

4.0 MUNICIPAL WATER SYSTEM 15

4.01 Water Distribution System Basis of Design 15
4.02 Water Main Layout 15
4.03 Depth of Water Main 17
4.04 Joint Restraint 18
4.05 Meters 18
4.06 Commercial Buildings with Fire Suppression Systems 18
4.07 Abandoned Well Management 19

5.0 PARKING LOT DESIGN 20

5.01 Definitions 20
5.02 Basis of Design 20
5.03 Overflow Parking Design 21

5.04 Transitional Parking Design 22
5.05 Parking Lot Design 23

6.0 ROAD DESIGN 24

6.01 Basis of Design 24
6.02 Right-of-Way and Street Width 25
6.03 Vertical Alignment 25
6.04 Horizontal Alignment 26
6.05 Intersections 26
6.06 Sight Distance 27
6.07 Cul-de-sacs 27
6.08 Pavement Design 28
6.09 Driveway Design 29
6.010 Street Lighting 29

7.0 PUBLIC ROAD DESIGN 30

7.01 Basis of Design 30

8.0 PRIVATE ROAD DESIGN 30

8.01 Basis of Design 30
8.02 Condominium Developments 30

9.0 TRAFFIC IMPACT STUDIES 31

9.01 Basis of Design 31

10.0 CONSTRUCTION PROCESS 32

10.01 Submit Construction Plans To City 32
10.02 Determination of Construction Permitting 32
10.03 Determination of Construction Inspection and Testing Responsibilities 33
10.04 Escrow Requirements 33
10.05 Preconstruction Meeting 34
10.06 Shop Drawings 34
10.07 Notice To Proceed Issued By the City for Construction 34
10.08 Start Construction 34
10.09 Post-Construction 34
10.010 Conditional Completion 35
10.011 Substantial Completion 36
10.012 Final Completion 37
10.013 Final Construction Acceptance 37

Appendix A Construction Phase Closure Checklist A-1
Appendix B Environmental Permits Checklist B-1

PART II. STANDARD DETAILS 1

PART III. TECHNICAL SPECIFICATIONS 1

01330 Submittals

01441 Horizontal Directional Drilling

02445	Casing Pipe Construction
033053	Miscellaneous Cast-In-Place Concrete
221113	Water Distribution Piping
221313	Sanitary Sewers
311000	Site Clearing
312000	Earth Moving
312319	Dewatering
321216	Asphalt Paving
321313	Concrete Paving
329200	Turf and Grasses
330500	Common Work Results for Utilities
334100	Storm Utility Drainage Piping

FORWARD

The City of Brighton has prepared this manual to expedite the planning process as it applies to land development projects in the City. The manual is intended to outline and explain the site planning and construction permitting procedures pertinent to each stage of the project planning process. The provisions of this manual are not intended to repeal, limit, or supersede any provisions of the City of Brighton Code of Ordinances or any other Ordinances of the City of Brighton.

This manual contains design standards and specifications for the construction of site improvements and other information useful to the developer and design professional in preparing and implementing plans for land development projects in the City of Brighton. The manual also references and adopts a number of design standards developed by other agencies, including the Livingston County Drain Commissioner, Livingston County Road Commission, AASHTO, and the "Ten States" Boards.

The developer and design professional may reproduce any of the forms in the manual for use in preparing and submitting applications. The City cautions such users that standards, forms, submittal deadlines, and fees may change periodically, and the user should contact the appropriate departments to ensure that the appropriate forms and procedures are being followed.

It is the desire of the City of Brighton to encourage and foster positive working relationships with all who are affected by the Land Development Planning process. Questions and comments may be directed to the Planning Director.

GENERAL

A. The most recent edition of the Design Standards shall be used in the design process. Designer shall verify that they are using the most current edition.

B. Developer is responsible for reviewing the requirements for Site Plan Review as noted in Chapter 82 Subdivisions and Site Plan Review, Article II of the City of Brighton Municipal Code, most recent addition.

C. Developers should be aware that there may be special requirements and exceptions for properties within the Downtown Business District. Contractor is responsible for reviewing the Municipal Code for requirements within this area for storm water management and other site plan requirements.

PART I. ENGINEERING DESIGN STANDARDS

1.0 STORM WATER MANAGEMENT SYSTEM

1.01 Storm Water Procedure for Plan Review

A. Sites within the City of Brighton that are adjacent to or outlet to a County Drain must submit plans to the Livingston County Drain Commissioner (LCDC) for review and approval.

B. All storm water management systems shall conform to the standards set forth by the LCDC. City Standards are defined in this section. Where there is a discrepancy between the County and City standards, the City Engineer shall determine which standard is required for the site in question.

C. Private storm sewer systems must comply with these standards. Private systems do not require a full review from the LCDC office. However, a Soil Erosion and Sedimentation Control (SESC) permit from the LCDC office is required. A letter from the City Engineer stating the private system has been designed in general conformance with LCDC standards is required to obtain the SESC permit.

D. A storm water management system basis of design shall be submitted with the site plan for approval by the City Engineer. The basis of design shall include an area map indicating all tributary drainage areas and runoff coefficients, including off-site areas. The basis of design shall include an analysis of the site's storm water outlet.

E. The City of Brighton Downtown Development Area (DDA) has special requirements for storm water management and site layouts. Developer should review the City of Brighton Code of Ordinances for DDA.

F. The use of Low Impact Development (LID) is encouraged. For more information, please see Low Impact Development Manual for Michigan: A Design Guide for Implementers and Reviewers, an LID manual issued by the Southeast Michigan Council of Governments (SEMCOG).

G. The City encourages site storm water management design to mimic the site's presettlement hydrology by using design techniques that infiltrate, filter, store, evaporate and detain runoff close to its source.

H. The City Engineer reserves the right to determine site specific requirements based on the review of the plans.

I. The City of Brighton does not hold or maintain storm sewer in easements. An appropriate vehicle must be established for long-term maintenance of storm sewers and detention/retention basins, as approved by the City Council.

1.02 Storm Water Conveyance

A. Natural swales and channels should be preserved whenever possible.

B. Ditches shall be wide, shallow and well vegetated.

C. Ditches shall be designed to convey a 10-year storm. Minimum allowable velocity for a 10-year storm shall be 1.5 ft/sec. Maximum allowable velocity shall be 4.0 ft/sec. If this velocity is exceeded, scour prevention shall be provided.

D. Provisions shall be made for all off-site flow draining through the site.

E. The Rational Method for calculating storm water runoff is generally acceptable for sites less than 100 acres in size.

F. All storm sewers shall be designed by a Rational Method for a 10-year, 12-hour duration storm, Q = CIA, where:

Q = total storm runoff flow, in cubic feet per second (cfs)
C = runoff coefficient (percent impervious area)
I = rainfall intensity rate (inches per hour)
A = tributary drainage area (acres)

1) Rainfall intensity rate (I) shall be calculated from the Steel formula for a 10-year storm, I = 175 / (t+25), where "t" = time of concentration (minutes). The minimum permissible value of "t" is 15 minutes. The values of "t" and the runoff coefficient are subject to approval of the City Engineer.

2) The runoff coefficient C shall be as recommended in Table 1. Where a weighted coefficient is employed, the computations shall be attached to project plans.

Table 1 - Runoff Coefficient (C Factor) Values

Type of Surface	C Factor
Water Surfaces	1.00
Roofs	0.80 to 1.00
Asphalt or concrete pavements	0.90 to 1.00
Gravel, brick, or macadam surfaces	0.60 to 0.80
Impervious soils	0.60 to 0.80
Impervious soils with turf	0.40 to 0.60
Slightly pervious soils	0.30 to 0.50
Slightly pervious soils with turf	0.20 to 0.40
Moderately pervious soils	0.20 to 0.30
Moderately pervious soils with turf	0.15 to 0.25
Completely undeveloped pervious soils	0.10 to 0.20
Playgrounds	0.20 to 0.35

G. Storm sewer pipe material may be any of the types listed below. All pipe must be properly backfilled per the City's standard detail

- Concrete
- Polyvinyl Chloride (PVC)
- High-Density Polyethylene Pipe (HDPE)
- Ductile Iron

H. The minimum acceptable size for storm sewers constructed in the public right-of-way, including inlet/catch basin leads, shall be 12-inch diameter. Private storm sewers in paved areas shall be no less than 12-inch diameter. Private storm sewers in lawn or landscape areas shall be no less than 6-inch diameter installed at 1.0 percent slope.

I. Sewer velocities, capacity, and friction losses shall be based on Manning's formula, generally with n=0.010 for plastic pipe, 0.013 for concrete pipe, and 0.021 for corrugated metal pipe.

$$Q = A\frac{1.486}{n}r^{2/3}s^{1/2}$$

J. The minimum design velocity for storm sewers shall be 2.5 feet per second (fps) with the pipe flowing full. Maximum design velocities shall be 10 fps.

Table 2

Pipe Size	Minimum % of Grade 2.5 ft/sec	Desirable Range % of Grade		Maximum % of Grade 10 ft/sec
		4 ft/sec	8 ft/sec	
12"	0.32	0.78	3.12	4.88
15"	0.24	0.58	2.32	3.62
18"	0.20	0.46	1.82	2.84
21"	0.16	0.38	1.48	2.30
24"	0.14	0.30	1.24	1.94
27"	0.12	0.26	1.06	1.66
30"	0.10	0.22	0.92	1.44
36"	0.08	0.18	0.72	1.12
42"	0.06	0.14	0.58	0.92
48"	0.06	0.12	0.50	0.76
54"	0.04	0.10	0.38	0.60
60"	0.04	0.10	0.34	0.54
66"	0.04	0.08	0.32	0.48

K. Riprap shall be placed as an erosion control measure for outlets with design velocities exceeding 4 fps. A minimum of ten (10) square yards of riprap with median stone size of six (6) inches shall be placed over a heavy geotextile fabric at the outlet. Special

consideration may be extended in reviewing maximum velocities of sewers serving areas of extreme topography.

L. Hydraulic gradients shall be shown as a part of all storm sewer profiles. In no case shall the elevation of the hydraulic gradient exceed the elevation of a point lying one (1) foot below the rim elevation of a manhole, catch basin, or inlet.

M. No portion of a storm drainage system shall be permanently submerged.

N. Planned ponding on parking lots is not to be considered an acceptable method of providing storm water retention, except on sites of less than one acre in area, upon approval by the City Engineer.

1.03 Sewer Locations

A. Storm sewer shall be located in general conformance with the approved typical street cross sections (see Details section).

B. Where sewer placement in easements is approved, a permanent easement will be required, the width of which will be determined by the City Engineer.

C. Manhole and catch basins shall not be placed greater than 400 feet apart for sewers less than 30 inches in diameter and 600 feet apart for larger sewers.

D. Manholes and catch basins with more than one inlet shall be a minimum of 48 inches in diameter.

E. Inlet structures placed in the public right-of-way shall be spaced a maximum of 400 feet apart or a maximum of 400 feet from highpoints.

F. The spacing and/or the number of inlets required to meet design flows in streets, private drives and parking areas shall be based on 1 cfs per 90 square inches of opening in an inlet or catch basin cover.

Table 3 - Manhole/Catch Basin Frame & Cover

			Manufacturer or Equal		
Type	**Location**	**Type of Cover or Inlet**	**East Jordan**	**Neenah**	**Maximum Drainage Area (acres)**
MH	All	Vented	1040	R-1916 F1	N/A
CB	Type A Curb	Flat grate with Vertical open back	7000-T1-M1	R-3070	0.71
CB	Type B Curb	Flat Grate with Roll Back	7065-T1-M1	R-3034-B	0.87
CB	Pavement/Shoulder	Flat Grate	1020-M1	R-2060-D	0.66
CB	Open Area	Beehive Grate 4" High	1020-01	R-2560-D	0.63
CB	Gutter	Concave Inlet	5100	R-3238	0.96

1.04 Detention Basins

A. Unless otherwise approved by the City Engineer, each site shall have provision for on-site detention. Each site shall be capable of storing a volume of water required to limit the

outflow to an agriculture rate (0.2 cfs/acre) or to a rate that the downstream properties can accept, whichever is less.

B. Each site shall be capable of storing the volume required using Livingston County Drain Commissioner's "A Simple Method of Detention Design" for a 100-year frequency storm.

C. The detention volume calculations shall account for offsite drainage. Offsite drainage does not have to be detained; however, the orifice hole sizing calculations shall account for offsite drainage.

D. Riser design shall be compliant with Livingston County Drain Commission Standards.

E. All outlets will be designed to discharge at an elevation within two feet of the 100-year floodplain elevation for the receiving water body. Discharge at the "crest" of slopes will not be permitted.

F. A minimum of one foot of freeboard will be required for all detention basins.

G. The inlet and outlet of the detention basin shall be placed at opposite ends of detention basin.

H. A sediment forebay shall be provided at the inlet of all detention basins. The capacity of the forebay shall be equivalent to 5% of the 100-year storm volume.

I. The volume and storage provided for controlling the "bankfull" flood will be equal to or in excess of the total rain from a 1.5-year, 24-hr storm

J. A defined emergency spillway shall be provided and set at an elevation 6 inches above the design high water elevation

K. Detention basin side slopes shall not exceed 3:1 side slopes without the use of fencing.

L. An outlet control structure with outlets for 1st flush, bankfull, and 100-year storm volumes shall be provided. The definition of these volumes can be found in the Livingston County Drain Commission Standards.

Table 4

1st Flush Volume (ft^3)	=	1815 x A x C
Bankfull Volume (ft^3)	=	8160 x A x C
100 Year Storm Volume (ft^3)	=	Total volume necessary as determined using the Livingston County Drain Commission Standards.

Where: A = Acreage
C = Runoff Coefficient

M. Planned ponding on parking lots is not to be considered an acceptable method of providing storm water detention.

N. A landscape plan for the area surrounding the proposed detention basin and meeting requirements from the City of Brighton Code of Ordinances shall be provided.

1.05 Retention Basins

A. A retention basin provides storage of water for a lengthy period of time and drains through evaporation/infiltration. A retention basin can be used in place of or concurrently with a detention basin if the following criteria are met:

1. An overflow assessment will be required. The assessment should include descriptions of the surrounding areas, including nearby homes, which would be impacted in the event of an overflow. The overflow assessment shall include a defined emergency overflow spillway.
2. Retention basins shall be sized to store two inches of runoff from the entire tributary area from a 100-year frequency storm. The City Engineer reserves the right to require additional storage up to that required by two consecutive 100-year storm events based on the results of soils data or the overflow assessment. If such additional storage is required, freeboard requirements may be reduced at the discretion of the City Engineer and the Livingston County Drain Commissioner.
3. Soil borings 20 feet below the proposed basin bottom must be provided. The documented high level of the groundwater shall be provided. The soils must be adequate to drain the basin through infiltration.
4. A minimum of three feet of freeboard will be required for all retention basins.
5. A sediment forebay shall be provided at the inlet of all retention basins. The capacity of the forebay shall be equivalent to 5% of the entire volume.
6. Retention basin side slopes shall not exceed 3:1 side slopes without the use of fencing.
7. A landscape plan for the area surrounding the proposed retention basin and meeting requirements from the City of Brighton Code of Ordinances shall be provided.

1.06 Underground Containment Systems

A. It is the City's preference that storm water runoff containment occurs above ground. However, underground detention/retention may be proposed. The proposed underground system must conform to the following standards:

1. The underground system shall be one of the following types or an approved equal:

Detention Systems	Retention Systems
Closed Pipe	Perforated Pipe
Box Vault	Open-Bottom Pipe

2. The system shall include a pretreatment sediment removal system such as a sediment chamber before the storm water's entrance to the underground system similar to the sediment forebays for above ground systems.
3. Soil borings shall be provided to a depth of 20 feet below proposed bottom elevation. The documented high level of the groundwater shall be provided.

4. If the system is to be located under pavement, structural calculations shall be provided to ensure that the system will not fail under normal loading conditions.

5. Volume calculations for detention type systems shall follow the Livingston County Drain Commissioner's "A Simple Method of Detention Design" for a 100-year frequency storm.

6. Retention type systems shall be sized to store two (2) inches of runoff from the entire tributary area from a 100-year frequency storm. The City Engineer reserves the right to require additional storage up to that required by two consecutive 100-year storm events based on the results of soils data or the overflow assessment.

7. The calculations for system volume shall not include the void spaces of any fill surrounding the structural piping.

8. The outlet control structure for detention systems shall meet the Livingston County Drain Commission standards for above ground systems, including the following:

    a. The outlet flow shall be controlled at 0.2 cfs/acre or a rate which the downstream properties can accept, whichever is lesser.

    b. The outlet control structure shall have outlets located at the following levels: bankfull, first flush, and 100-year storm event.

9. Access openings shall be provided at intervals of no less than 200 feet per branch of underground system.

10. The system shall be designed such that the lowest catch basin rim elevation shall be lower than the overflow outlet. This ensures that the storm water runoff will overflow into the parking lot during times of maintenance issues. If additional storage is directed by the City Engineer, the lowest catch basin rim elevation shall coincide with said storm event outlet.

11. A system maintenance plan shall be submitted to ensure that the system will be taken care of properly.

2.0 SITE GRADING AND SOIL EROSION CONTROL

2.01 Grading and Soil Erosion/Sedimentation Control Plan

A. A comprehensive grading and soil erosion/sedimentation control plan shall be submitted for any project involving over 0.5 acre of disturbance or involving a grade change exceeding 12 inches, regardless of acreage.

B. The plan shall be prepared in accordance with the Soil Erosion and Sedimentation Control Guidebook by the Michigan Department of Environmental Quality and such other criteria as may be established by the local enforcing agent for the Soil Erosion and Sedimentation Control Act (Part 91 of Act 451 of Public Acts of 1994).

C. The use of Best Management Practices to remove pollutants, including sediment, from storm water runoff is encouraged.

2.02 Topographic Plan

A. The topographic plan shall be prepared at a scale of not less than one inch equals forty feet (1:40 scale) for properties of one acre or less, or not less than one inch equals one hundred feet (1:100 scale) for properties greater than one acre.

B. The topographic plan shall be prepared based on NGVD datum, with a contour interval not greater than two feet. The benchmark(s) should be noted on the plan.

C. The topographic plan shall include all natural features, including, but not limited to, flowing streams or ditches, intermittent watercourses, lakes, ponds, marshes and swamps, wetlands limits as defined by the Goemaere-Anderson Wetlands Protection Act (Part 303 of Act 451 of PA of 1994), wooded areas, and trees.

D. The topographic plan shall include all existing man-made features, including, but not limited to buildings, pavement structures, soil stockpiles, and retaining walls. The plan shall clearly note any such features proposed for demolition and removal from the site.

E. The topographic plan shall also provide information as to the on-site soils, as may be obtained from on-site borings or excavations, or the USDA Soils Conservation Service Soils Maps.

2.03 Final Grading and Drainage Plan

A. Grading plans shall consider desirable natural features and the character of the land and shall preserve such features where possible.

B. The plan shall present all proposed site features with complete dimensions, including buildings, roads, parking lots, walks, drives, retaining walls, retention basins, sediment basins, drainage facilities, and lawn areas.

C. The plan shall show final grade elevations of finished floor and basement floor elevations for proposed structures, high and low points, swales and ridge lines, flow lines at drainage structures, and other significant points in sufficient detail to demonstrate the proposed surface flow patterns.

D. All proposed developments shall be graded such that storm water runoff will be intercepted within the boundaries of the site, collected, and conducted through an

enclosed storm water system or vegetated swale/open ditch to an approved point of discharge. Drainage provisions shall be designed in accordance with Section 1.0, Storm Water Management System.

E. Maximum slope for any paved area is five (5) percent. Minimum slope is 0.5 percent for a road and 1.0 percent for a paved parking area. Variations may be considered where significant topographic constraints warrant, provided the designer justifies the variation in writing, demonstrating the impact on the project if the variation is not approved, and discussing any measures taken to mitigate the consequences of steeper or flatter slopes.

F. Maximum slope for a non-paved area is three-foot horizontal to one-foot vertical (3:1 slope). No slope may be in excess of 3:1 without the use of a retaining wall.

G. The plan shall contain stamped structural calculations for retaining walls within a slope of one-foot horizontal to one-foot vertical (1:1 slope) of any parking lot, building or structure.

H. In single-family subdivisions and condominium developments, typical lot grading details shall be included on the grading plan.

2.04 Soil Erosion and Sedimentation Control Plan

A. The soil erosion and sedimentation control plan shall identify all areas of potential accelerated soil erosion and shall identify specific measures to be utilized, both temporarily during construction and permanently, to control erosion. The measures shall be identified on the plan by means of the Unified Soil Erosion Control Key System.

B. The plans shall identify the acreage of the area to be disturbed.

C. The plans shall include a schedule of installation of temporary and permanent soil erosion and sedimentation control measures. The developer shall maintain all temporary measures in good repair until permanent stabilization measures have been established and proved effective.

D. Wetlands areas, streams, and ponds shall be protected before topsoil is stripped from any upland area.

E. Trees and wooded areas identified as preserved on the approved site plan must be fenced off from the construction zone with safety fence before topsoil is stripped from the site.

3.0 MUNICIPAL SANITARY SEWER SYSTEM

3.01 Sanitary Sewer Basis of Design

A. A sanitary sewer basis of design shall be submitted with construction plans for approval by the City Engineer. The basis of design shall include an area map indicating the areas and zoning district for each area to be served, including any off-site areas. The basis of design will reflect proposed developmental phasing.

B. In general, sanitary sewer systems shall be designed in accordance with the Recommended Standards for Wastewater Facilities by the Great Lakes-Upper Mississippi River Board of State Public Health and Environmental Managers ("Ten States Standards").

C. Residential developments shall consider a design population of at least 2.6 persons per dwelling unit, with wastewater generation of 100 gallons per capita per day (gpcd).

In non-residential developments, flow estimates shall be based on water use records from similar facilities, as may be provided by petitioner and approved by the City Engineer, or an estimate of proposed wastewater generation in accordance with REU Schedule. Flow estimates shall be expressed in terms of residential equivalent users (260 gpd per REU).

D. Sanitary sewers shall be designed to carry peak flow at their 0.90 capacity line while maintaining scouring velocities at minimum flows.

E. All sanitary sewer pipe shall be a minimum of 8 inches in diameter.

F. Minimum design velocity shall be 2 feet/sec for sewers 42 inches and less in diameter and maximum design velocity shall be 10 feet/sec. The allowable pipe slopes are shown in the following table:

Table 5

Pipe Diameter (Inches)	Minimum Slope (Feet per 100 Feet)	Maximum Slope (Feet per 100 Feet)
8	0.40	10.00
10	0.28	7.00
12	0.22	5.30
15	0.15	3.90
18	0.12	2.90
21	0.10	2.32
24	0.080	1.92
27	0.067	1.64
30	0.058	1.44
36	0.046	1.12
42	0.037	0.92

G. All sanitary sewer testing shall be in compliance with Technical Specifications.

H. All users on a groundwater discharge plant shall not discharge water softener backwash to the sanitary sewer system and shall not use a sodium based reagent.

I. Sump pumps cannot discharge to the sanitary sewer system.

3.02 Sewer Location

A. Sanitary sewers shall be located in general conformance with the approved typical street cross sections (see Details section). Sewer shall be placed in public street right-of-way whenever practicable. Placement in easements will be permitted upon approvals of City Engineer and the Director of Utilities.

B. All sanitary manholes and sewer mains must be accessible by vehicles.

C. Where sewer placement in easements is approved, a permanent easement will be required, the width of which will be determined by the City Engineer. In all cases, the sewer easement shall be maintained as accessible to City personnel and equipment for maintenance and repairs. Easement size shall be determined by the following table:

Table 6

BURIAL DEPTH (ft)	EASEMENT WIDTH (ft)
5 – 7	20
7.1 – 12	30
12.1 – 17	40
> 17.1	50

D. Permanent structures are not allowed within the utility easement.

3.03 Depth of Sewers

A. In general, sanitary sewers shall be installed sufficiently deep to receive wastewater from basements and to prevent freezing. In no case shall sewer be placed with less than four feet of cover to the top of the pipe. Where sewer is placed in undeveloped areas or areas subject to future grading, probable future grades will be considered.

B. Where future development plans call for construction of pavement along or across the sanitary sewer route, granular backfill will be used.

C. All sanitary sewer 8 inches and greater shall be profiled in the construction drawings. Top of pipe elevations, rim elevations, final grade elevations, utility crossings, stationing, and backfill requirements shall be shown in the profile view.

3.04 Manholes

A. Manholes shall generally be placed at intervals not to exceed 300 feet; at every change of grade, direction, and pipe size; and at each junction of sewers.

B. Exterior drop manhole connections shall be used whenever a sewer enters a manhole at an elevation more than 18 inches above the manhole invert. Interior drop manhole connections may be used an as alternative if approved by the City Engineer and/or Utility Director.

C. When pipe sizes change, the larger sewer shall be dropped so that the 0.8 depth line or the pipes match.

D. An allowance of at least 0.10 foot shall be made between all inlet and outlet pipes within manholes with a horizontal change in direction of the sewer.

E. In industrial developments, and as required by the City Engineer, a sampling manhole shall be constructed along the on-site sewer. The sampling manhole shall be located along a straight run of pipe and shall have a vertical drop of six inches from inlet to outlet along a poured flow channel.

F. All manholes and cleanouts shall be brought up to final grade prior to the City accepting operational responsibility.

3.05 Service Connections

A. Sanitary sewer services shall be connected to the sewer through wye fittings. Connections of manholes require approval of the City Engineer and Utility Director.

B. All sanitary sewer cleanouts shall have a heavy duty lid, as detailed in Section 221313 Sanitary Sewers.

C. Cleanouts located in pavement areas shall be installed with a concrete pad as shown in the Standard Details.

D. Food service facilities and other buildings as required by the Director of Utilities shall be serviced by grease traps. Traps shall be located outside of the building below ground and of sufficient size to provide 30-minute detention of the peak wastewater flow. The minimum size is 1,000 gallons and maximum size is 2,000 gallons. Each trap shall contain an interior baffle to prevent grease from reaching the public waste water system. Grease interceptors shall be constructed of impervious material capable of withstanding abrupt changes in temperature. They shall be of substantial construction, watertight, and equipped with removable covers that are gastight and watertight. The interceptor must be easily accessible for pumping and inspection. A cleanout should be provided on the discharge line downstream of the grease interceptor. The grease interceptor shall be connected to all food service drains including kitchen floor drains, mop sinks, dish washers, and food prep sinks. All non-food service wastewater drains shall be separated from the grease interceptor and connect to the public sewer lead downstream of the grease interceptor. A low flow, minimum grease producing food service facility may utilize interior “under sink” grease traps if they are protective of all food service drains as listed above and approved by the Utility Director.

E. No footing drains or other storm or groundwater drainage facilities shall be connected to sanitary sewer.

F. Sanitary sewer laterals shall have a minimum diameter of 6 inches.

G. Cleanouts should typically be provided at all bends and for every 100 feet of a sanitary service lateral. The Utility Director and/or City Engineer may waive this requirement if the layout contains no 90-degree fittings and/or sewer cleaning can be completed with the proposed layout.

3.06 Wastewater Pump Stations

Wastewater pump stations shall be designed by the City Engineer.

3.07 Pressure Sewers Systems

A. Developer should explore all alternatives to provide a gravity sewer system. Pressure sewer systems should only be proposed after demonstrating to the satisfaction of the City Engineer that a gravity system is not practical and/or cost-effective.

B. The following criteria should be used as a minimum when designing a pressure system:

1. Maintain a minimum of 2 feet per second in the force main.
2. Maximum pump head shall not exceed 104 feet.
3. Easements shall be dedicated the entire length of the service lateral from the grinder pump to the property line.
4. Tracer wire shall be included on all low-pressure force mains.
5. Valves shall be placed at each junction of force main, and in such a way that no more than two valves have to be closed to isolate a branch of force main for repairs.
6. All flushing connections and air releases shall be brought up to final grade prior to the City accepting operational responsibility.

4.0 MUNICIPAL WATER SYSTEM

4.01 Water Distribution System Basis of Design

A. A water distribution system basis of design shall be submitted with construction plans for approval by the City's Engineer. The basis of design shall include an area map indicating the areas and zoning district for each area to be served, including any off-site areas. The basis of design will reflect proposed developmental phasing.

B. In general, water distribution systems shall be designed in accordance with the Recommended Standards for Water Works by the Great Lakes-Upper Mississippi River Board of State Public Health and Environmental Managers ("Ten States Standards").

C. Residential developments shall consider a design population of at least 2.6 persons per dwelling unit, with an annual average daily water demand of 100 gallons per capita per day (gpcd).

D. In non-residential developments, flow estimates shall be based on water use records from similar facilities, as may be provided by petitioner and approved by the City Engineer, or an estimate of proposed water demand in accordance with the residential equivalent user (REU) schedule.

E. For the purpose of network analysis and water main design, maximum daily demands will be computed as no less than twice the average daily demand. Peak hourly flows will be computed as no less than four times the average daily demand. For small residential developments, the peak hour/average day ratio used will approach ten to one. Selection of maximum day/average day and peak hour/average day will be made in consultation with the City Engineer.

F. Water main shall be designed to provide fire protection (rates and durations) based on the recommendations of the Insurance Services Office (ISO) and the adopted fire prevention code for projected land use and building types.

G. Water main shall be sized to meet peak hourly demands and to meet maximum daily demands plus fire flow. The petitioner shall provide a network analysis based on a model acceptable to the City Engineer. The City Engineer shall be consulted during development of the model to determine appropriate assumptions regarding water supply, pipe roughness characteristics, and the appropriate scenarios for modeling.

H. Distribution mains shall be a minimum of 8-inch diameter. Transmission mains of 12-inch diameter or greater may be required if future area development plans dictate such sizing.

4.02 Water Main Layout

A. All sites developing an on-site water main network shall be serviced by two sources of water or shall be planned for service from an adjacent site by extending the water main to one or more property lines.

B. All water mains shall be carried to the limits of the development for future extension by neighboring properties. Water main in excess of 1,600 lineal feet between interconnections may be required to be oversized at the developer's expense. The City may also require, at its expense, that any water main in the system be oversized.

C. Dead-end mains may not exceed 600 feet in a single-family, residential neighborhood, nor 500 feet in a multiple-family, residential neighborhood.

D. Hydrants shall be a maximum of 500 feet on center along the water main on a dedicated street or approved fire lane. Hydrants shall be a maximum of 300 feet in commercial areas. Additional hydrants may be required at locations selected by the Fire Marshal. A reduction in this standard must be approved by the City Engineer or Fire Marshal.

E. Hydrant assemblies less than 25 feet from the main may be connected to the water main with 6-inch pipe. Hydrant assemblies greater than 25 feet from the main shall be connected with 8-inch pipe. This 8-inch pipe may be reduced down to a 6-inch pipe within 25 feet from the hydrant.

F. Dry hydrants are discouraged. The use of dry hydrants will require special approval by the Brighton Area Fire Authority and shall meet the minimum requirements of the National Fire Protection Association, NFPA 1142, Water Supply for Suburban and Rural Fire Fighting.

G. Buildings shall be covered within a 250-foot radius of a hydrant and within no more than 400 feet of hose laid to any part of the structure. No hydrant shall be placed within 40 feet of a building/structure. In single-family, residential areas, the hydrant coverage may be increased to 350-foot radius with the approval of the Fire Marshal and City Engineer. The radii of coverage may be reduced in industrial areas at the discretion of the Fire Marshal.

H. Fire hydrants shall be placed in such a way that no more than two hydrants have to be put out of service when isolating a section of water main.

I. Valves shall be placed at each junction of water main, and in such a way that no more than three valves have to be closed to isolate a branch of water main. Water mains 16-inch and greater shall use butterfly valves, rather than gate valves. Butterfly valves shall be placed in gate wells.

   All valves shall be brought up to final grade. Valves shall be placed no closer than 20 feet from a building footing and shall be buried with a minimum of 5.5 feet of cover and a maximum of 8.5 feet of cover.

J. The maximum distance between valves shall be 500 feet. This distance can be exceeded for transmission lines with the approval of the Utility Director and/or City Engineer.

K. All curb stops shall be brought up to final grade. Curb stops shall not be located within any driveways, walkways or cement sidewalks. Curb stops shall be placed no closer than 20 feet from a building footing and shall be buried with a minimum of 5.5 feet of cover and a maximum of 8.5 feet of cover.

L. Curb stops shall be located on the same side of the roadway as the building they are serving.

M. All unnecessary utility crossings shall be avoided. A minimum 10-foot horizontal and 18-inch vertical clearance shall be maintained from sanitary and storm sewers. Water main shall be placed no closer than 20 feet from any building footing.

N. Water main shall be placed in the right-of-way and outside the roadway surface where possible, in general accordance with approved typical street cross sections (see Details). Water main may be placed in easements if approved by the City Engineer. Where

placement in easements is approved, a minimum 25-foot-wide permanent easement is required. The easement must be maintained as accessible to City personnel and equipment for maintenance and repair.

Permanent structures are not allowed within the utility easement.

O. All water main 8 inches and greater shall be profiled in the construction drawings. Top of pipe elevations, rim elevations, final grade elevations, utility crossings, stationing, and backfill requirements shall be shown in the profile view.

P. HDPE pipe may be installed by the horizontal boring method for special applications when approved by the City Engineer or Utility Director. Special applications may include:

1. Surface water crossings
2. Highway crossings
3. Wetlands
4. Unstable soil areas
5. Areas that would require high restoration costs due to conventional construction
6. A valve shall be provided on each side of all critical crossings, such as surface water crossings.

Q. In addition, a valve manhole with corporation stops on each side of the valve shall be installed for purposes of future chlorination, sampling, and leak testing.

R. Where the use of HDPE pipe is used in conjunction with ductile iron pipe, the inside diameter of the HDPE pipe shall be equal to or greater than the inside diameter of the ductile iron pipe. HDPE pipe shall be manufactured from high density PE 3408 polyethylene resin, having a dimension ratio (DR) of 11 or less. The DR is calculated as the outside diameter of the pipe divided by the minimum wall thickness. The Construction Drawings shall note if the HDPE pipe will be ductile iron pipe sizes (DIPS) or iron pipe sizes (IPS) and shall specify the dimension ratio (DR) rating.

S. Tracer wire shall be included on all water main distribution lines and service leads. Refer to Technical Specifications for details.

T. Tracing wire systems shall terminate in Rhino TriView FlexTM Tracing Wire Stations. Terminals shall be external and blue for water main systems. Terminals should also be located at valves, if possible.

U. In projects where there are multiple units within one building, such as a site condominium, one (1) service lead shall be provided to the building. Once the water service lead is within the building, the lead may be split to service individual units. Each unit must be metered and accessibility by the City to the meter(s) must be maintained at all times.

4.03 Depth of Water Main

A. Water main shall be buried with a minimum of 5.5 feet of cover over the pipe, and maximum of 8.5 feet of cover. Where water main is installed in undeveloped areas, or areas subject to future grading, probable finished grades will be considered.

B. If water main is constructed in areas where pavement will be constructed in the future, granular backfill shall be used.

4.04 Joint Restraint

A. All water main or process piping shall be designed with mechanical restraint of joints in accordance with the Standard Technical Specifications and Details.

B. Concrete thrust blocks are not permissible.

4.05 Meters

A. All buildings using City water shall be metered. In general, water meters shall be placed in basements, utility rooms, boilers, or mechanical rooms. Water meters are to be placed no higher than 4 feet above floor. Water meters must be in a heated area that is accessible at all times. When necessary, meters may be placed in a well-drained meter pit upon approval of the Director of Utilities.

B. Fire lines (4-inch diameter or greater) may bypass the meter, provided the fire system is alarmed in accordance with International Building Code (IBC), City's adopted Fire Prevention Code, and National Fire Protection Association (NFPA) latest editions.

C. The Livingston County Building Department will require that calculations for limited area sprinkler systems be presented as a hydraulically calculated model rather than pipe schedule when the fire flow passes through the meter.

4.06 Commercial Buildings with Fire Suppression Systems

A. All connections to the municipal water main to a fire service main for fire protection systems shall be arranged in accordance with one of the following so that they can be isolated:

   a. A post indicator valve installed not less than 40 feet from the building.

      i. For buildings less than 40 feet in height, a post indicator valve shall be permitted to be installed closer than 40 feet but at least as far from the building as the height of the wall facing the post indicator valve.

   b. An indicating valve in a pit, installed of adequate size and accessible for inspection, operation, testing, maintenance, and removal of equipment contained therein.

B. A separate service off of the main for fire suppression and domestic service is required.

C. The domestic water service may be allowed to split off the fire suppression with the approval of the Fire Marshal and City Engineer. The split must occur outside the building with a shut off valve (curb stop) placed on the domestic service.

4.07 Abandoned Well Management

A. No person shall install a private well without first obtaining a permit from the City of Brighton and the Livingston County Local Health Department.

B. If existing structures are served by a private well and are used for industrial purposes or are located within 200 feet of the City of Brighton water system, and that site experiences a well failure, the site will be required to connect to the City of Brighton water system.

C. Any cost of extending the City of Brighton water system to comply with the connection requirements shall be the responsibility of the property owner unless otherwise determined and agreed to by the City of Brighton.

D. At the time of a connection to the City of Brighton water system, the existing well(s) on the premises must be abandoned and plugged. In those instances where the well is inaccessible, such as under a building/structure or covered by concrete/asphalt, the City Engineer shall determine if the mandatory well plugging can be waived. A licensed well driller shall perform the plugging of the well.

E. Any extension to the City of Brighton water system shall be designed and constructed in accordance with the City of Brighton Engineering design standards.

5.0 PARKING LOT DESIGN

5.01 Definitions

A. Parking means the standing or placement of motor vehicles currently used to transport people, goods, or materials in the conduct of normal daily activities provided that such standing or placement is limited to periods of less than 48 hours.

B. Parking lot means an area utilized for the off-street parking of automobiles and is built on the surface of the ground.

C. Overflow parking lots means parking lots that provide additional parking spaces in excess of what the City of Brighton Code of Ordinances would otherwise require for the uses located on the property in question.

D. Transitional parking lots means a parking lot located on a site that (1) was previously occupied by a use excluding a parking lot, and (2) could otherwise be occupied by a new permitted use that would fulfill all requirements of the City of Brighton Code of Ordinances.

5.02 Basis of Design

A. All parking lots shall be designed in general accordance with the latest Standards set forth by the City of Brighton. Copies of all calculations and drawings verifying compliance with City Standards are to be submitted to the City Engineer for review.

B. For each development, sufficient parking stalls, as required in the City of Brighton Code of Ordinances Section 98-82 and 98-462, shall be provided. Sufficient signed and marked barrier-free spaces, as required, shall be provided. Special requirements for parking are provided for developments in the Downtown Business District.

C. Adequate ingress and egress to the parking facility shall be provided by clearly defined driveways. Parking lots shall be designed to prevent vehicles from backing into the street or requiring use of the street for maneuvering between parking rows.

D. For each development, the number of trips generated per hour shall be included. Trip generation rates from Trip Generation from the Institute of Transportation Engineers (ITE) shall be utilized. A traffic circulation plan including trip generation/distribution models shall be developed for any development in excess of 50 trips per hour, unless otherwise directed by the City's Planning Director. The traffic circulation plan shall consider adjacent properties and their development potential.

E. Fire Department Access:

   a. The minimum outside turning radius for parking lot aisles necessary for fire department vehicle access to and from a building shall be 50 feet.

   b. The minimum width drive for 1-way traffic for fire access shall be 20 feet.

   c. The minimum width drive for 2-way traffic for fire access shall be 26 feet.

5.03 Overflow Parking Design

A. Overflow Parking Design shall be in conformance with requirements set-forth in Section 98-88 of the City of Brighton Code of Ordinances.

B. Drive aisle shall be a minimum of 24 feet wide at the right-of-way line.

C. Barrier-free parking spaces shall be provided as set forth in section 98-83(3) of the City of Brighton Code of Ordinances.

D. Overflow parking lot spaces, driveways, drive aisles, entrances, exits, circulation and maneuvering areas, may be hard surfaced and curbed, gravel, or grass. Pavement cross sections shall be designed based on the existing soil conditions and shall accommodate the types of traffic loads anticipated. Minimum pavement cross sections are listed below.

Bituminous Parking Lot

- 1-½" Bituminous wearing course MDOT mix 36A
- 1-½" Bituminous leveling course MDOT mix 13A
- 6" MDOT No. 22A aggregate base
- 6" sand subbase meeting the requirement of MDOT Cl. II C.I.P.

Concrete Parking Lot

- 6" Concrete
- 6" sand subbase meeting the requirement of MDOT Cl. II C.I.P.

Gravel Parking Lot

- 8" MDOT No. 21AA limestone or MDOT 23A
- 6" sand subbase meeting the requirement of MDOT Cl. II C.I.P.

Green Solutions for Parking Lots

- Green solutions for parking lots such as permeable grass paving systems, porous gravel paving grids, porous asphalt and pervious concrete shall be designed and installed per the manufacturer's recommendations.

E. The parking lot must be able to prohibit access with a closed, lockable gate.

F. Overflow parking lots shall comply with the lighting requirements set forth in section 98-83(9) of the City of Brighton Code of Ordinances.

G. All overflow parking lots shall be adequately screened from view to protect adjacent land uses.

H. All parking lots shall be graded or drained to dispose of stormwater runoff. No surface water from a commercial or industrial parking lot shall be permitted to drain directly onto adjoining property unless a drainage easement has been obtained.

5.04 Transitional Parking Design

A. Transitional Parking Design shall be in conformance with requirements set-forth in Section 98-89 of the City of Brighton Code of Ordinances.

B. Transitional parking lots shall be designed so as to permit parking in spaces that would correspond in size to those set forth in Section 98-83(1) of the City of Brighton Code of Ordinances, if the lot were constructed like a traditional, surfaced lot.

C. Barrier-free parking spaces shall be provided as set forth in section 98-83(3) of the City of Brighton Code of Ordinances.

D. The drive aisle shall be a minimum of 24 feet wide at the right-of-way line.

I. Transitional parking lot spaces, driveways, drive aisles, entrances, exits, circulation and maneuvering areas, may be hard surfaced and curbed or gravel. Pavement cross sections shall be designed based on the existing soil conditions and shall accommodate the types of traffic loads anticipated. Minimum pavement cross sections are listed below.

Bituminous Parking Lot

- 1-½" Bituminous wearing course MDOT mix 36A
- 1-½" Bituminous leveling course MDOT mix 13A
- 6" MDOT No. 22A aggregate base
- 6" sand subbase meeting the requirement of MDOT Cl. II C.I.P.

Concrete Parking Lot

- 6" Concrete
- 6" sand subbase meeting the requirement of MDOT Cl. II C.I.P.

Gravel Parking Lot

- 8" MDOT No. 21AA limestone or MDOT 23A
- 6" sand subbase meeting the requirement of MDOT Cl. II C.I.P.

E. Transitional parking lots shall comply with the drainage requirements set forth in section 98-83(8) of the City of Brighton Code of Ordinances.

F. Transitional parking lots shall comply with the lighting requirements set forth in section 98-83(9) of the City of Brighton Code of Ordinances.

G. All transitional parking lots shall be adequately screened from view to protect adjacent land uses.

5.05 Parking Lot Design

A. Parking lot pavement cross sections shall be designed based on existing soil conditions and shall accommodate the types of traffic loads anticipated. Minimum pavement cross sections are listed below and in the Details.

Light-Duty Parking Lot

- 1-½" Bituminous wearing course MDOT mix 36A
- 1-½" Bituminous leveling course MDOT mix 13A
- 6" MDOT No. 22A aggregate base
- 6" sand subbase meeting the requirement of MDOT Cl. II C.I.P.

Industrial Parking Lot

- 1-½" Bituminous wearing course MDOT mix 36A
- 4" Bituminous leveling course MDOT mix 13A (installed in two courses)
- 8" MDOT No. 22A aggregate base
- 6" sand subbase meeting the requirement of MDOT Cl. II C.I.P.

Concrete Parking Lot

- 6" Concrete
- 6" sand subbase meeting the requirement of MDOT Cl. II C.I.P.

B. Areas subject to heavy truck traffic must be designed with an adequate pavement structure, designed to accommodate the anticipated loads.

C. Alternate pavement designs shall be designed in accordance with the AASHTO Guide for Design of Pavement Structures, latest edition. The Design Engineer shall submit detailed calculations, including justification for design parameters and traffic estimates, including load calculations.

D. All parking spaces and maneuvering aisles shall be designed and marked with dimensions described in the City of Brighton Code of Ordinances.

E. Concrete curbing (as shown in the Details section) shall encompass the entirety of the parking lot. Variances may be granted for sites that use Low Impact Development standards. Concrete curbs shall be a minimum of 2 feet in width.

F. Parking lot grades shall be at a minimum 1.0% and at a maximum 5.0%.

G. New curb cuts shall align with existing curb cuts.

H. Concrete sidewalks shall be installed across driveway entries within the road right-of-way on commercial properties.

I. Driveways shall have a minimum grade of 0.5 percent and a maximum grade of 8.0 percent.

6.0 ROAD DESIGN

6.01 Basis of Design

A. All streets shall be designed in general accordance with the latest Standards set forth by the City of Brighton and the Livingston County Road Commission (LCRC). Copies of all calculations and drawings verifying compliance with LCRC and City Standards are to be submitted for review of the City Engineer.

B. For each development, a traffic circulation plan including trip generation/distribution models shall be developed. The traffic circulation plan shall consider adjacent properties and their development potential. Trip generation rates from Trip Generation from the Institute of Transportation Engineers (ITE) shall be utilized in development of the traffic circulation plan.

C. Streets shall be classified in a street hierarchy system with design tailored to function as described below:

ARTERIAL - The function of these streets is to serve as the principal carrier of high-volume traffic flow connecting areas of principal traffic generation and carrying traffic into and away the City. Arterials should form a continuous and integrated system, shaping and defining areas of conflicting land use.

COLLECTOR - The function of these streets is to carry traffic between arterial and local streets and to provide access to adjacent residential neighborhoods. Streets serving over 75 dwelling units or serving primarily commercial properties shall be classified as collectors. It is anticipated that vehicles larger than a single unit (SU) truck will travel these streets (i.e., semi-tractor trailers (WB-50)).

INDUSTRIAL - These streets are defined by adjacent land use. Street design shall consider the geometric and structural demands of heavy truck traffic.

LOCAL - These streets function solely to provide access to residential lots immediately adjacent to the street. These streets shall carry maximum average daily traffic (ADT) of 1000 trips/day and serve 75 dwelling units or less.

ALLEYS - Alleys are defined by the historic function of providing access to rear lots. No new alleys are to be created in the City of Brighton.

D. The minimum design speed of any residential or industrial street shall be 30 mph. Collector and arterial streets shall be designed for a minimum design speed of 40 mph. Greater design speeds may be required for any street as required by the City Engineer and/or the City Council.

E. A plan detailing placement of traffic control devices (signage, striping, etc.) shall be submitted for review of the City Engineer. The traffic control plan shall be prepared in accordance with the *Michigan Manual of Uniform Traffic Control Devices (MMUTCD).*

F. Names of new streets shall not duplicate the names of existing streets' names, unless a new street is a continuation of, or in alignment with the existing or platted street. Road names will not be adopted that may be confused with a similarly named road, highway or street within the City of Brighton.

6.02 Right-of-Way and Street Width

A. The minimum right-of-way width and street width as measured from back of curb to back of curb (B/C) shall be as follows:

Classification	R.O.W. Width	Street Width (B/C)
Arterial	varies	varies
Collector	66	38
Industrial	66	38
Local	66	34
Alley	varies	varies
Cul-de-sacs	75 (radius)	60 (radius)

B. A typical street cross section is included in the PART II Standard Details.

C. Additional "No Parking" signs will be required in areas where the road width is less than 26 feet wide.

6.03 Vertical Alignment

A. Street grades shall meet the following requirements:

Classification	Min. Grade	Max. Grade
Arterial	0.5 percent	5.0 percent
Collector	1.0 percent	5.0 percent
Industrial	1.0 percent	5.0 percent
Local	1.0 percent	6.0 percent

Variances from these grades may be permitted by City Engineer if topographic conditions warrant.

B. All streets shall have a minimum 2.0 percent transverse crown centered in the cross section.

C. A vertical curve shall be required when the algebraic difference in road grade is 1% or more. Vertical curves shall be designed according to AASHTO guidelines, except that the minimum length of curve shall be 100 feet.

D. Surface grades within street intersections shall not exceed 3.0 percent for a distance of 100 feet from the intersection of the street intersections.

6.04 Horizontal Alignment

A. Street jogs with centerline offsets of less than 125 feet shall not be permitted.

B. Tangents shall be introduced between reverse curves, in accordance with AASHTO standards. Minimum tangent length between reverse curves shall be equal to the travel distance in three seconds at the design speed.

C. Compound curves should be used in lieu of "broken-back curves" (successive curves in the same direction with a tangent of one second travel time or less). The flatter curve shall not have a radius of more than 1.5 times the sharper curve.

D. Horizontal curves shall be designed in accordance with AASHTO standards for the appropriate design speed. The calculated minimum curve radius shall apply to the centerline of the inside traveled lane. Superelevation shall not be considered unless specifically approved by the City Engineer.

E. Boulevard sections at the entryway shall be 10 feet minimum in width. The boulevard median shall not exceed 300 feet in length nor shall it be less than 20 feet in length. In no case shall the boulevard extend beyond the right-of-way. Sufficient taper of the roadway width must be provided adjacent to the interior end of a boulevard, according to MDOT requirements.

F. A clear zone shall be incorporated in the design of all roads with ditch drainage, according to AASHTO guidelines. On curbed roads and cul-de-sacs, the horizontal clear zone distance shall be at least 5 feet behind curb and a vertical clear vision zone must be assured between heights 3 to 8 feet above pavement level, except that trunks of deciduous trees will be allowed in the clear vision zone.

6.05 Intersections

A. Street intersections shall be at a 90-degree angle. In no event shall the intersection angle be less than 80 degrees.

B. The minimum horizontal curve radius shall be two hundred thirty (230) feet. This may be reduced to one hundred fifty (150) feet where the posted speed limit will be twenty-five miles per hour (25 mph) or less.

C. Proposed private roads or entrances to a development shall align directly across from, or be offset at least two hundred fifty (250) feet from public streets or private road intersections on the opposite side of the street, measured centerline to centerline. This standard may be reduced if approved by the Livingston County Road Commission.

D. Private roads and driveways (excluding driveways serving one or two dwelling units) within a development shall align directly across from other private roads or driveways or be offset at least one hundred fifty (150) feet measured centerline to centerline.

E. Vertical grades at the intersection shall be no greater than 3 percent for a distance of 100 feet from the centerline of the intersection. Vertical curves shall be provided.

F. Intersection curb radii for the various street classifications are as follows (measured at the back of curb):

Classification	Intersection Radii
Arterial	35 feet
Collector	35 feet
Industrial	35 feet
Local	30 feet

Where streets of differing classifications intersect, the larger required radius shall govern.

G. The minimum grade around intersection radii shall be 0.5 percent along the gutter. The curb grades may be independent of the street centerline grade to meet this requirement.

H. Low spots in intersections shall not be allowed. Drainage must be carried away from the intersection.

I. Detail drawings of intersections may be required by the City Engineer. The details shall include adequate spot elevations to ensure that pavement and gutters will drain properly and meet City Standards.

J. Fire lane markings shall meet the requirements as specified in the adopted fire prevention code.

6.06 Sight Distance

A. A continuous minimum stopping sight distance shall be provided along the vertical and horizontal alignments in accordance with AASHTO Standards for Design Stopping Sight Distance.

Design Speed (mph)	Required Sight Distance (feet)
30 or below	200
35	250
40	305
45	360

The line of vision shall be measured from a point 4.5 feet above the pavement to an assumed driver's eye height of 3.5 feet above the pavement.

6.07 Cul-de-sacs

A. All dead-end streets shall terminate in a cul-de-sac. Where cul-de-sacs represent a permanent termination of a proposed street, the maximum length of road shall be 500 feet from intersection to center of cul-de-sac.

B. The cul-de-sac right-of-way radius shall be 75 feet. The outside radius of the cul-de-sac (at edge of metal) shall be 60 feet. A 35 foot radius landscape island may be permitted in the center of residential cul-de-sacs, at the discretion of the City Engineer, provided low-maintenance ground cover or landscape material is proposed, and an adequate mechanism for perpetual maintenance of the landscaping is developed.

C. At the bulb of the cul-de-sac, the right-of-way radii shall be 66 feet and the pavement radii (at edge of metal) shall be 50 feet.

D. Pavement grades in the cul-de-sac bulb shall have a minimum cross grade of 2 percent. Grades along the curb shall be minimum 0.5 percent. A detail drawing of each cul-de-sac bulb is required, with adequate spot elevations to demonstrate proper drainage and compliance with City standards.

6.08 Pavement Design

A. Minimum pavement cross sections are included in the Details. Pavement edge drain is considered standard, but may be waived at the discretion of the City Engineer if adequate soils information is provided to justify an alternate means of subbase drainage.

Residential Bituminous Road

- 1-½" bituminous wearing course MDOT mix 36A.
- 1-½" bituminous leveling course MDOT mix.13A. Use 0.10 gal/SY bond coat between courses.
- 8" MDOT No. 22A aggregate base.
- 10" MDOT Cl. II granular subbase C.I.P.

Industrial Bituminous Road

- 1-½" bituminous wearing course MDOT mix 36A.
- 5" bituminous aggregate leveling course MDOT mix 13A (2 courses). Use 0.10 gal/SY bond coat between courses.
- 10" MDOT No. 22A aggregate base.
- 12" MDOT Cl. II granular subbase C.I.P.

Concrete Road

- 6" Class A Concrete
- 6" MDOT Cl. II granular subbase C.I.P.

Gravel Road

- 7" MDOT No. 22A wearing course
- 6" MDOT Cl. II granular subbase C.I.P.

B. The developer shall submit soil boring logs for all industrial or collector streets. The borings shall be located no more than 500 feet apart in both traffic lanes. Additional borings are required where vegetation, drainage patterns, or other factors suggest a change in soil type or groundwater conditions. No fewer than six borings shall be provided for any collector road, regardless of length.

The borings record shall include a classification of soils encountered and groundwater conditions. If soil conditions are unfavorable, the City Engineer may require the developer to prepare and submit an alternate pavement design.

C. Alternate pavement designs may also be initiated by the developer provided adequate soils information and traffic data are provided. Alternate pavement cross sections must equal or exceed the structural strength of the standard cross sections.

6.09 Driveway Design

J. Driveway intersections shall meet all standards set forth in the City of Brighton Code of Ordinances.

K. New curb cuts shall align with existing curb cuts.

L. Concrete sidewalks shall be installed across driveway entries within the road right-of-way on commercial properties.

M. Driveways shall have a minimum grade of 0.5 percent, maximum grade of 8.0 percent and a maximum grade within 80 feet of the centerline intersection with a public thoroughfare of 2.0 percent.

N. No driveway opening onto public right-of-way shall be located within 30 feet of another such driveway.

6.010 Street Lighting

A. The City of Brighton and Detroit Edison will hold a contract for the design and installation of the street lighting provided.

B. The site Developer shall contact Detroit Edison during the site plan approval process to determine the necessary design requirements and associated costs for design and construction.

C. Detroit Edison will provide the street lighting design for the site. The Developer is responsible for all costs associated with the street lighting design and review process.

D. Detroit Edison will install the street lighting during the construction of the site. The Developer is responsible for all costs associated with the installation of the lighting as determined by Detroit Edison.

7.0 PUBLIC ROAD DESIGN

7.01 Basis of Design

A. Public Road Design shall meet the requirements of Section 6.0 Road Design.

B. The Public Road Design Standards shall apply to all public roads and all private roadways that are intended to be converted to public roadways.

C. Sidewalks are required along the frontage of all major and secondary thoroughfares. They shall be located in the right-of-way, one foot from the ultimate right-of-way line. Proposed grades must be indicated along the property line and of the walk, driveways, and intermittent locations along the length of the walk.

8.0 PRIVATE ROAD DESIGN

8.01 Basis of Design

A. Private Road Designs shall meet the requirements of Section 6.0 Road Design, with the following exceptions:

a. A minimum road easement of sixty six (66) feet is required for all private roads.

b. The private road easement and road shall be adequately drained, meeting the latest requirements of Livingston County Drain Commissioner Standards, as to prevent flooding or erosion of the roadway.

c. All streets shall be surfaced with a bituminous concrete mixture approved by the City Engineer.

d. The minimum width of paved roadways (clear distance, front face to front face of curbs) shall be 40 feet.

e. Concrete sidewalks shall be constructed along each side of every street in the subdivision.

8.02 Condominium Developments

A. Private Condominium Drive Designs shall meet the requirements of Section 6.0 Road Design, with the following exceptions:

a. All outdoor parking and drive areas required herein shall be hard-surfaced with asphalt, concrete, or similar acceptable surfacing materials approved by the City Engineer. All such parking lots, related drives, approaches and roadways shall be curbed with six-inch-high cast-in-place reinforced concrete continuous barrier curbing. All parking and related driveways must be drained by underground structures.

b. Access drive shall be no greater than 24 feet wide. Additional “No Parking” signs will be required.

c. The lighting for the parking area shall be in conformance with the City of Brighton Code of Ordinances

d. Site plan shall show the location of snow storage areas. Snow storage areas shall be clearly accessible, adequately paved and drained areas for snow storage. Such snow storage areas shall be in excess of any required parking spaces.

e. Minimum off-street parking and circulating quantities and facilities shall be provided as specified in Article III Off-street Parking and Loading of the City of Brighton Code of Ordinances.

f. All new or altered parking lots shall provide parking spaces with a stall width of nine feet, center to center, and a stall depth of 18 feet. Parallel parking spaces may be utilized where appropriate. Parallel parking spaces shall be nine feet wide and 20 feet in length with a six-foot maneuvering space between each two parallel parking spaces.

g. Sidewalks are encouraged, but not mandatory, along interior drives of a Condominium Development.

9.0 TRAFFIC IMPACT STUDIES

9.01 Basis of Design

A. The City of Brighton recognizes the direct correlation between land use decisions and traffic operations. Traffic impact studies assist in coordinating land use and transportation planning by forecasting the potential generation of new vehicular traffic, evaluating proposed access plans and identifying driveway related road improvements at the site plan review stage, and identifying off-site road improvements needed to accommodate future traffic patterns.

B. The handbook titled "Evaluating Traffic Impact Studies – A Recommended Practice for Michigan Communities" outlines:

1. When Traffic Impact Studies Should be Required
2. What Analyses Should be Included
3. How the Study Should be Reviewed and Used
4. Who is Qualified to Prepare and Review Impact Studies

C. The City of Brighton Planning Director has the ability to waive a traffic impact study requirement if the City has reliable existing data or planned future impact studies that are deemed sufficient.

10.0 CONSTRUCTION PROCESS

The following is the recommended procedure for the submittal and approval of Construction Drawings for development within the City. The procedure lists the process and the responsible party from the initial submittal to the City through construction and final acceptance by the City.

10.01 Submit Construction Plans To City

A. Construction plans are to be submitted to the City after Planning Commission and City Approval of the Site Plan for the following types of development:

   a. Commercial/Industrial Site Plans that require the extension of City utilities (sanitary sewer and/or water main) or the extension of City roadway.

   b. Multi-family or Condominium Developments

B. Upon receipt of necessary site plan approvals, the Developer's Engineer shall provide the City of Brighton with three (3) sets of construction documents for use in reviewing the proposed improvements.

C. The City will forward construction plans to Engineering Consultant, Fire Department, and appropriate staff/department once requested escrow amounts are received.

D. Once approval from the City is obtained, the Developer may proceed with obtaining the necessary permits.

10.02 Determination of Construction Permitting

A. *The Michigan Department of Environmental Quality (MDEQ) Permit Identification Checklist, Form EQP3580* – Developer is responsible for identifying the necessary permits required for the project. The MDEQ Form EQP3580 lists key questions to help identify what DEQ permits, licenses, or approvals that may be needed. The Developer is responsible for obtaining the most recent version of the checklist from the Michigan.gov website. A copy of MDEQ Form EQP3580 is provided in the Appendices.

B. *Land Use Permit* – Developer shall apply for a land use permit from the City.

C. *Grading Permit* – Developer is to obtain a grading permit on building site from Livingston County Drain Commission (LCDC).

D. *Building Permit* – The City of Brighton provides building permit inspections. Building Permit requires the attachment of the LCDC obtained Grading Permit.

E. *Necessary Governmental Agency Construction Permits* – Developer is ultimately responsible for obtaining all required permits for construction.

F. *Easements* – Developer is to obtain and provide copies of acquired easements to City.

G. *Livingston County Drain Commission (LCDC)* Approval – Required for all sites adjacent to or outlets to County Drain.

H. *Soil Erosion and Sedimentation Control (SESC) Permit* - Developer shall apply for SESC permit. A letter from the City Engineer stating that the construction drawings have been designed in general conformance to the Livingston County Drain Commission (LCDC) standards will be required prior to LCDC issuance of the SESC permit.

I. *Livingston County Road Commission (LCRC) Approval* – Required for all work within County road right-of-way.

J. *Michigan Department of Transportation (MDOT) Approval* – Required for all work within State road right-of-way.

K. *Michigan Department of Environmental Quality (MDEQ) Approval* - Developer's Engineer shall submit a completed electronic copy of the necessary MDEQ construction permit applications for City Engineer's review. Once permit is approved by the City Engineer, they will request that the utility system Owner sign the permit application.

The City Engineer will submit approved construction drawings and completed permit application to the MDEQ for the necessary construction permit.

10.03 Determination of Construction Inspection and Testing Responsibilities

A. Inspection Responsibilities:

- Storm Sewer and Storm Water Basins – typ. Developer's Engineer
- Private Roads and Pavements – typ. Developer's Engineer
- Survey (setting controls and construction staking) – typ. Developer's Engineer
- Sanitary Sewer (including Pumping Stations) – typ. City Engineer
- Water Main – typ. City Engineer

B. Construction Testing Responsibilities:

- Compaction Testing (Private Road and Pavement) – Developer
- Compaction Testing (Sanitary, Water Main, Storm Sewer) – Developer
- Television Inspection (Sanitary and Storm Sewer) – Developer
- Ring Deflection Testing (Sanitary and Storm Sewer) – Developer
- Air Testing (Sanitary and Storm Sewer) – Developer
- Infiltration/Exfiltration Testing (Sanitary) – Developer
- Hydrostatic Testing (Water Main) – Developer
- Hydrant Testing (Water Main) – Developer
- Disinfection (Water Main) – Developer

C. All sanitary tests within the public right-of-way or dedicated utility easement shall be witnessed by the City Engineer.

D. All water main tests within the public right-of-way or dedicated utility easement shall be witnessed by the City Engineer.

10.04 Escrow Requirements

A. The City Engineer will determine an escrow amount required to provide the necessary construction services. Escrow fees may include the following:

1. City Engineer construction inspection fees.
2. Flushing fees.
3. Conforming to Construction Contingency (escrow for this item will be used only if conforming to construction records (as-builts) are not provided to the City's Engineer within 3 months of the municipal utilities installation).

B. The City will determine whether a performance guarantee or surety is required for the proposed improvements.

C. Developer will be required to escrow this amount with the City prior to construction.

D. The City Engineer will determine a bond amount that will be held until the Developer's engineer provides certification for any private roadway or storm sewer improvements. The bond will be released upon receiving certification documents and a final walkthrough by City representative.

10.05 Preconstruction Meeting

A. Developer's Contractor to provide insurance naming the City and the City's Engineer as additional insureds.

B. Developer's Contractor to provide a preliminary schedule of construction activities.

C. A preconstruction conference between the City of Brighton, City Engineer, Developer's Engineer, Developer's underground contractor and private utilities with an interest in the project is required prior to construction start.

10.06 Shop Drawings

A. The Developer's Contractor shall submit shop drawings to the City Engineer for review.

B. No construction will be allowed to start on any improvements without approved shop drawings.

C. The Developer's Contractor shall submit all Fire Protection Systems Shop Drawings to the Fire Department for review.

10.07 Notice To Proceed Issued By the City for Construction

A. Contractor's certificate of insurance submitted and approved.

B. Escrow and Bond amounts determined by City are provided.

C. Performance guarantee/sureties submitted to City.

D. Necessary information submitted to City for start of construction. Necessary information may include, but is not limited to, copies of issued construction permits, schedule of construction activities, list of contractor contacts and emergency numbers, and copies of easements necessary for construction activities.

10.08 Start Construction

A. Developer's Contractor to contact City Engineer for notification of construction start a minimum of seven (7) days prior to construction.

10.09 Post-Construction

A. Construction Engineer to finalize 'red-line' Conforming to Construction Record (As-Built) Drawings and submit to Developer's Design Engineer.

B. Developer's Design Engineer to incorporate 'red-line' comments on the Conforming to Construction Record Drawings.

C. Construction Engineer to finalize project file including lead sheets and daily reports.

D. An electronic copy (Autocad format) of the development is to be provided to the City.

E. As-Built drawings are to show GPS coordinates of utility features such as manholes, valves, cleanouts, hydrants, etc.

10.010 Conditional Completion

A. Residential Projects

1. The City will inspect public utilities (sanitary sewer and water main) within the public right-of-way or dedicated utility easement. The land owner is responsible for obtaining inspections from the Livingston County Building Department for utilities outside of the public right-of-way or dedicated utility easement.
2. When utility construction within the public right-of-way or dedicated utility easement is complete, the necessary tests must be completed and passed, and all punch list items must be addressed. Any portions of work found to be unacceptable or incomplete must be repaired or replaced prior to issuance of Conditional Completion.
3. All roads shall have been constructed according to plans, except the top course of pavement when using asphalt, prior to issuance of Conditional Completion.
4. All common areas, such as streets, sidewalks, street lights, sanitary sewer, storm sewer, other utility infrastructures, work within right-of-way or City utility easements, recreational areas, parks, common buildings in condominium or multifamily developments, pathways, storm water management systems, or any item outlined on the plans, in PUD Agreements, or the Master Deed shall have been constructed prior to issuance of Conditional Completion.
5. When Conditional Completion is issued, the City may allow 50% of building permits to be issued unless otherwise directed by the City.
6. A grading permit is required at this time, if not already obtained. Developer is to obtain a grading permit on building site from Livingston County Drain Commission (LCDC).
7. Developer is to obtain and provide copies of acquired easements to City. Easements for public utilities based on "As-Built" conditions require a sketch and legal description to be submitted by the Developer's Design Engineer for review and approval along the record drawings.
8. All required items shall be submitted and approved prior to issuance of the first Certificate of Occupancy.

B. Commercial Projects

1. The City will inspect public utilities (sanitary sewer and water main) within the public right-of-way or dedicated utility easement. The land owner is responsible for obtaining

inspections from the Livingston County Building Department for utilities outside of the public right-of-way or dedicated utility easement.

2. When utility construction within the public right-of-way or dedicated utility easement is complete, the necessary tests must be completed and passed, and all punch list items must be addressed. Any portions of work found to be unacceptable or incomplete must be repaired or replaced prior to issuance of Conditional Completion.
3. All roads shall have been constructed according to plans, except the top course of pavement when using asphalt, prior to issuance of Conditional Completion.
4. All common areas, such as streets, sidewalks, street lights, sanitary sewer, storm sewer, other utility infrastructures, work within right-of-way or City utility easements, recreational areas, parks, pathways, storm water management systems, or any item outlined on the plans, in PUD Agreements, or the Master Deed shall have been constructed prior to issuance of Conditional Completion.
5. When Conditional Completion is issued, the City will allow the appropriate building permits to be issued.
6. At the time of Conditional Completion, record drawings will be requested. The drawings shall be prepared and certified by a design engineer registered in the State of Michigan and submitted to the City for review. The as-built drawings shall be in accordance with the requirements outlined earlier in the document and in Appendix A.
7. Developer is to obtain and provide copies of acquired easements to City. Easements for public utilities based on "As-Built" conditions require a sketch and legal description to be submitted by the Developer's Design Engineer for review and approval along the record drawings.
8. All required items shall be submitted and approved prior to issuance of the first Certificate of Occupancy.

10.011 Substantial Completion

A. Residential Projects

1. When the project has reached 50% build out, and all items related to Conditional Completion have been addressed, the City will issue Substantial Completion.
2. When Substantial Completion is issued, the City will issue another 30% of building permits, unless otherwise directed by the City.
3. At this time, a post punch list will be developed which shall be addressed and approved prior to issuance. Any portions of work found to be unacceptable or incomplete must be repaired or replaced prior to issuance of Substantial Completion.
4. When all required items have been addressed and approved, the project can move to Final Completion

10.012 Final Completion

A. When the project has reached 80% build out, and all items related to Substantial Completion have been addressed, the City may issue Final Completion, unless otherwise directed by the City.

B. The City will generate a final punch list. Once all items have been addressed, the City will conduct a final site inspection.

C. At the time of the final inspection, the Owner or his Contractor shall provide all labor and equipment necessary to allow the City to inspect the system.

D. All punch list items must be addressed.

E. All fees incurred by the City and/or their representatives, including but not limited to Attorney and Engineering, along with all associated escrows must be paid in full by the Contractor.

F. Record drawings and related documents shall have been provided to the City.

10.013 Final Construction Acceptance

A. The City will accept the construction when the project has addressed all items outlined above and only after the following have been submitted:

1. Acceptance by Utility Director or authorized representative of the City following completion of project.
2. The Construction Phase Closure Checklist is completed. Checklist is included in Appendix A and shall be completed by City Engineer.
3. Warranties and guarantees for a period of 1 year from acceptance by City. Amount to be determined by Utility Director.
4. Signed easements
5. Dedication of utilities
6. Conforming to Construction Record Drawings
7. Satisfactory results of all construction testing
8. Road and Pavement Certifications
9. Storm Sewer Certifications
10. Service lead sheets
11. Daily construction reports
12. Operation and maintenance manuals
13. Waivers of liens

B. Written confirmation by Engineer that the construction has been performed in general conformance with the approved construction documents shall be obtained prior to placing municipal facilities in service.

Appendix A
Construction Phase Closure Checklist

CITY OF BRIGHTON, MICHIGAN
CONSTRUCTION PHASE CLOSURE CHECKLIST

The following checklist is to be completed by the City's Engineer prior to Acceptance of Operational Responsibility of the Sanitary Sewer and Water Systems by the City.

*** If Applicable Item is Checked "No" Final Acceptance Letter cannot be issued***

PROJECT INFORMATION

Project Name: Contract No.	
General Contractor	
RPR Inspector	
Owner	
Checklist Completed By	
Date	
Project Type (circle)	Sanitary Sewer Water Main

TESTING REPORTS

The following Testing Reports for the Project have been Approved:

Sanitary Sewer System

Circle One			**Testing Report**	**Date Completed/Passed**	**Initial**
Yes	No	N/A	Television Inspection		
Yes	No	N/A	Ring Deflection		
Yes	No	N/A	Air Testing		
Yes	No	N/A	Infiltration / Exfiltration		
Yes	No	N/A	Manhole Inspections		
Yes	No	N/A	FM Pressure Test		

Water System

Circle One			Testing Report	Date Completed/Passed	Initial
Yes	No	N/A	Air Testing		
Yes	No	N/A	Hydrostatic		
Yes	No	N/A	Hydrant Testing		
Yes	No	N/A	Valves Inspected		
Yes	No		Bacti Testing		

MISCELLANEOUS REQUIREMENTS

Yes	No	N/A	Final Road Grade Completed Prior to Final Inspection of MH Covers
Yes	No	N/A	Final Road Grade Completed Prior to Final Cleaning of Manholes
Yes	No	N/A	Sewer Leads Staked
Yes	No	N/A	Final Road Grade Completed Prior to Final Inspection of Curb Stops, Valve Boxes, and Hydrants
Yes	No	N/A	Water Leads Staked
Yes	No	N/A	Final Inspection with City Engineer, City's Utility Director and Contractor
Yes	No	N/A	Received all necessary O & M Manuals
Yes	No	N/A	Daily Reports (complete, legible)

CONFORMING TO CONSTRUCTION RECORDS

Developer or Developer's Engineer shall submit to City's Engineer conforming to construction records showing the plan and profile design of the sanitary sewer and water main systems. This plan will be prepared under the direction of, and sealed by, a registered professional engineer.

For all projects, the developer will submit the following forms of media for the conforming to construction records:

Yes	No	2 sets, scaled 1"=50' or less, on sheets no larger than 24" x 36", labeled as “Conforming to Construction”
Yes	No	1 PDF Copy
Yes	No	1 Electronic AutoCad submittal meeting the following standards:
		• Use AutoCad blocks for utility structures & fittings. Each feature type should represent a unique block.
		• All pipe segments should connect to the center of each feature.
		• Pipe segments should not be broken for annotation purposes.
		• Annotate the pipe with text (not Mtext) with its insertion point near the line segment it represents. It can be on the same layer as the feature.
		• Each utility system should be created using several layers to help define its components. The layers should be identified or organized for the specific utility.
		• Use the county coordinate system, which is Michigan State Plan South NAD83 International Feet, NAVD 88.

RESPONSIBILITIES OF CITY ENGINEER

Yes	No	N/A	Punch List (issued, completed)	Initial/Date:
Yes	No	N/A	Shop Drawings (complete file)	Initial/Date:
Yes	No	N/A	Video Taping	Initial/Date:
Yes	No	N/A	Sanitary Wye Sheets (complete, copies sent)	Initial/Date:
Yes	No	N/A	Water Lead Sheets (complete, copies sent)	Initial/Date:
Yes	No	N/A	Daily Reports (complete, legible)	Initial/Date:

Appendix B
Environmental Permits Checklist

PERMIT INFORMATION

www.michigan.gov/deqpermits

The Department of Environmental Quality (DEQ) has prepared a list of key questions to help identify what DEQ permits, licenses, or approvals of a permit-like nature may be needed. By contacting the appropriate offices indicated, you will help reduce the possibility that your project or activity will be delayed due to the untimely discovery of additional permitting requirements later in the construction process. While this list covers the existence of permits and approvals required from the DEQ, it is not a comprehensive list of all legal responsibilities. A useful way to learn whether other requirements will apply is to go through the Self-Environmental Assessment in the Michigan Guide to Environmental, Health, and Safety Regulations, online at: http://www.michigan.gov/ehsguide. Please call the Environmental Assistance Center at 800-662-9278 to talk with any of the DEQ programs noted below.

KEY QUESTIONS:	Yes ☐	No ☐	PROGRAM WEBPAGE AND CONTACTS
MISCELLANEOUS CONSTRUCTION			
Air Quality Permit to Install: Will your business involve the installation or construction of any process equipment that has the potential to emit air contaminants (e.g. dry sand blasting, boilers, standby generators)?	Y ☐	N ☐	Air Quality Division (AQD), Permit Section
Asbestos Notification: Does the project involve renovating or demolishing all or portions of a building? Notification is required for asbestos removal and required for all demolitions even if the structure never contained asbestos.	Y ☐	N ☐	AQD, Asbestos Program, 517-284-6777
Land and Water Featured Programs (Water Resources Division) - USACE Consolidated Permits: Please consult the Permitting at the Land and Water Interface Decision Tree document to evaluate whether your project needs a land and water management permit (i.e., Does the project involve filling, dredging, placement of structures, draining, or use of a wetland?).	Y ☐	N ☐	Water Resources Division (WRD), 517-284-5567 Joint Permit Application
Soil Erosion and Sedimentation Control: Does the project involve an earth change activity (including land balancing, demolition involving soil movement, and construction)?	Y ☐	N ☐	Soil Erosion and Construction Storm Water, 269-567-3515, or Local Agency
NPDES Storm Water Discharge from Construction Sites Notice of Coverage: Does the project involve construction which will disturb one or more acres that come into contact with storm water that enters a storm sewer, drain, lake, stream, or other surface water?	Y ☐	N ☐	NPDES Storm Water Permits Program, 517-284-5588 or DEQ District Office
Public Swimming Pool Construction (Spas/Hot Tubs) Permits: Will your business involve the construction or modification of a public swimming pool, spa or hot tub?	Y ☐	N ☐	Public Swimming Pool Program, 517-284-6541, or DEQ District Office,
Does the project involve *construction* or alteration of any *sewage collection or treatment* facility?	Y ☐	N ☐	WRD, Part 41 Construction Permit Program, 906-228-4527, or DEQ District Office
Does the project involve construction of a facility that landfills, transfers, or processes of any type of *solid non-hazardous waste* on-site, or places *industrial residuals/sludge* into or onto the ground?	Y ☐	N ☐	Office of Waste Management and Radiological Protection (OWMRP), Solid Waste, 517-284-6588, or DEQ District Office
Does the project involve the construction of an on-site treatment, storage, or disposal facility for *hazardous waste*?	Y ☐	N ☐	OWMRP, Hazardous Waste Section, Treatment, Storage and Disposal, 517-284-6562
WATER SUPPLY *(More information, see: http://www.michigan.gov/deqwater, select "drinking water")*			
I am buying water from my community water supply (i.e. city of Detroit or Grand Rapids)	Y ☐	N ☐	Contact Local Water Utility , 517-284-6512
I have a private or other water supply well (Type III)	Y ☐	N ☐	Contact (District or County) Local Health Department , 517-485-0660
I have a Non-Community Water Supply (Type II)	Y ☐	N ☐	Guide, Contact (District or County) Local Health Department, 517-485-0660
I am a community water supply (Type I)	Y ☐	N ☐	Community Water Supply, DEQ District Office Community Water Supply Program, 517-284-6512

WASTEWATER MANAGEMENT			
Storm Water Discharge to Wetlands: Will storm water be collected, stored, or treated in a wetland area from a public road, industrial, commercial, or multi-unit residential development?	Y ☐	N ☐	WRD, Joint Permit Application, 517-284-5567
Great Lakes: Does the project involve construction, filling, or dredging below the Ordinary High Water Mark of one of the Great Lakes?	Y ☐	N ☐	WRD, Joint Permit Application, 517-284-5567
Inland Lakes and Streams: Does the project involve any dredging, filling, placement of structures, or the operation of a marina within an inland waterbody (e.g. lake, river, stream, drain, creek, ditch, or canal), enlargement of a waterbody, or excavation of a pond within 500 feet of a waterbody?	Y ☐	N ☐	WRD, Joint Permit Application, 517-284-5567
Storm Water Ponds and Discharges to Inland Lakes/Streams, or Great Lakes: Will storm water from any road or any other part of the development be discharged either directly or ultimately to an inland waterbody, or one of the Great Lakes; or will a storm water pond be constructed within 500 feet of an inland waterbody?	Y ☐	N ☐	WRD, Joint Permit Application, 517-284-5567
Does the project involve placement of fill, earth moving, or placement of structures within the 100-year *floodplain* of a watercourse?	Y ☐	N ☐	WRD, Joint Permit Application, 517-284-5567
Does the project involve construction of a building or septic system in a designated Great Lakes *high risk erosion area*?	Y ☐	N ☐	WRD, Shoreland Management, 517-284-5567
Does the project involve dredging, filling, grading, or other alteration of the soil, vegetation, or natural drainage, or placement of permanent structures in a designated *environmental area*?	Y ☐	N ☐	WRD, Shoreland Management, 517-284-5567
Does the project propose any development, construction, silvicultural activities or contour alterations within a designated *critical dune area*?	Y ☐	N ☐	WRD, Sand Dune Management, 517-284-5567
Does the project involve construction of a *dam*, weir or other structure to impound flow?	Y ☐	N ☐	WRD, Dam Safety Program, 517-281-6821
CONSTRUCTION PERMITS (SECTOR SPECIFIC)			
Does the project involve the construction or alteration of a water supply system or sewage disposal system for a **manufactured housing** project?	Y ☐	N ☐	Office of Drinking Water & Municipal Assistance (ODWMA), 517-284-6524
Does the project involve a **subdivision or site condominium** project utilizing individual on-site subsurface disposal systems or individual wells?	Y ☐	N ☐	ODWMA, 517-281-6821
Does the project involve the construction or modification of a **campground**?	Y ☐	N ☐	ODWMA, Campgrounds program, 517-284-6529
Does the project involve the construction or modification of a **public swimming pool**?	Y ☐	N ☐	ODWMA, Swimming pools program, 517-284-6529
OPERATIONAL PERMITS			
Renewable Operating Permit: Does your facility have the potential to **emit** any of the following: 100 tons per year or more of any criteria pollutant; 10 tons per year or more of any hazardous **air pollutant**; or 25 tons per year or more of any combination of hazardous **air pollutants**?	Y ☐	N ☐	AQD, Permit Section, 517-284-6634
NPDES: Does the project involve the **discharge of any type of wastewater** to a storm sewer, drain, lake, stream, or other **surface water**?	Y ☐	N ☐	WRD, DEQ District Office, or National Pollutant Discharge Elimination (NPDES) Permit Program, 517-284-5568
Does the facility have **industrial** activity that comes into contact with **storm water** that enters a storm sewer, drain, lake, stream, or other surface water?	Y ☐	N ☐	WRD, Permits Section, or DEQ District Office, 517-284-5588
Does the project involve the **discharge of wastewaters** into or onto the **ground** (e.g. subsurface disposal or irrigation)?	Y ☐	N ☐	WRD, Groundwater Permits Program, 517-290-2570
Does the project involve the drilling or deepening of **wells for waste disposal**?	Y ☐	N ☐	Office of Oil, Gas and Minerals (OOGM), 517-284-6841
Does the project involve landfilling, transferring, or processing of any type of **solid non-hazardous waste** on-site, or placing **industrial residuals/sludge** into or onto the ground?	Y ☐	N ☐	OWMRP, 517-284-6588 or DEQ District Office
Does the project involve the on-site treatment, storage, or disposal of **hazardous waste**?	Y ☐	N ☐	OWMRP, Hazardous and Liquid Waste, 517-284-6562

Does the project require a **site identification number** (EPA number) for regulated waste activities (used oil, liquid waste, hazardous waste, universal waste, PCBs)? (Hazardous Waste Program Forms & License Applications)	Y ☐	N ☐	OWMRP, DEQ District Office, 517-284-6562
Does the project involve the receipt, possession, manufacture, use, storage, transport, transfer, release, or disposal of **radioactive material** in any form?	Y ☐	N ☐	OWMRP, Radioactive Material and Standards Unit, 517-284-6581
Does the project involve decommissioning or decontamination of tanks, piping, and/or appurtenances that may have **radioactive levels** above background?	Y ☐	N ☐	OWMRP Radioactive Material and Standards Unit, 517-284-6581
Do you desire to develop a **withdrawal** of over 2,000,000 gallons of **water** per day from any source other than the Great Lakes and their connecting waterways? Or, do you desire to develop a withdrawal of over 5,000,000 gallons of water per day from the Great Lakes or their connecting waterways?	Y ☐	N ☐	WRD, DWEHS, Source Water Protection Unit, 517-284-6513
CHEMICAL ADDITION PROJECTS			
Are you using **chemicals** or materials in, or in contact with, **drinking water** at any point in the **water works system**?	Y ☐	N ☐	WRD, DEQ District Office, 517-284-6512, Public Water Supply Program
Are you applying a chemical treatment for the purpose of **aquatic nuisance control** (pesticide/herbicide etc) in a water body (i.e. lake, pond or river)? (5.	Y ☐	N ☐	WRD, Aquatic Nuisance Control and Remedial Action Unit, 517-284-5593
Are you applying materials to a water body for a **water resource management project** (i.e. mosquito control treatments, dye testing, or fish reclamation projects)?	Y ☐	N ☐	WRD, Surface Water Assessment Section, 517-331-5228
OPERATIONAL PERMITS (SECTOR SPECIFIC)			
Does the project involve the **transport** of some other facility's non-hazardous **liquid waste**?	Y ☐	N ☐	OWMRP, Transporter Program, 517-284-6562
Does the project involve the **transport of hazardous waste**?	Y ☐	N ☐	OWMRP, Transporter Program, 517-284-6562
Does your facility have an **electric generating unit** that sells electricity to the grid and burns a fossil fuel?	Y ☐	N ☐	AQD, Acid Rain Permit Program, 517-780-7843
Is the project a **dry cleaning establishment** utilizing perchloroethylene or a flammable solvent in the cleaning process?	Y ☐	N ☐	DEQ, AQD, Dry Cleaning Program, 517-284-6780
Does your **laboratory test potable water** as required for compliance and monitoring purposes of the Safe Drinking Water Act?	Y ☐	N ☐	DEQ, Laboratory Services Certifications, 517-284-5424
Does the project involve the generation of **medical waste** or a facility that treats medical waste prior to its disposal?	Y ☐	N ☐	OWMRP, Medical Waste Regulatory Program, 517-284-6594
Does the project involve transport of septic tank, cesspool, or dry well contents or the discharge of **septage** or sewage sludge into or onto the ground?	Y ☐	N ☐	ODWMA, Septage Program, 517-284-6535
Do you store, haul, shred or process **scrap tires**?	Y ☐	N ☐	OWMRP, Scrap Tire Program, 517-284-6586
Does the project involve the operation of a **public swimming pool**?	Y ☐	N ☐	ODWMA, Public Swimming Pools Program, 517-284-6529
Does the project involve the operation of a **campground**?	Y ☐	N ☐	ODWMA, Campgrounds, 517-284-6529 (
Do you engage in the business of **hauling bulk water** for drinking or household purposes (except for your own household use)?	Y ☐	N ☐	ODWMA, Water Hauler Information, 517-284-6527
PERSONAL LICENSES/CERTIFICATIONS			
Are you designated by your facility to be the **Certified Operator** to fulfill the requirements of a wastewater discharge permit (**NPDES including Storm Water or Groundwater**)?	Y ☐	N ☐	WRD, Operator Training, Storm Water Program, 517-284-5486
Are you a **drinking water operator** in charge of a water treatment or water distribution system, back-up operator, or shift operator?	Y ☐	N ☐	WRD, Operator Training, 517-284-5486
Are you a **water-well** drilling contractor, pump installer, **dewatering well** contractor or dewatering well pump installer?	Y ☐	N ☐	WRD, Well Construction Unit, 517-284-6523

OIL, GAS AND MINERALS			
Do you want to operate a **central production facility** (applies to oil and gas production facilities where products of diverse ownership are commingled)?	Y ☐	N ☐	OOGM, Petroleum Geology and Production Unit, 517-284-6826
Does the project involve the removal of sand from a **sand dune area** within two (2) miles of a Great Lakes shoreline?	Y ☐	N ☐	OOGM, Minerals and Mapping Unit, Sand Dune Mining Program, 517-284-6826
Does the project involve the diversion and control of water for the mining and processing of **low-grade iron ore**?	Y ☐	N ☐	OOGM, Petroleum & Mining, 517-284-6826
Does the project involve the surface or open-pit mining of **metallic mineral deposits**?	Y ☐	N ☐	OOGM, Petroleum & Mining, 517-284-6826
Does the project involve the mining of **nonferrous mineral deposits** at the surface or in underground mines?	Y ☐	N ☐	OOGM, Petroleum & Mining, 517-284-6826
Does the project involve mining **coal**?	Y ☐	N ☐	OOGM, Petroleum & Mining, 517-284-6841
Do you want to change the status of an **oil or gas** well (i.e. plug the well)?	Y ☐	N ☐	OOGM, Permits and Bonding, 517-284-6841
Does the project involve drilling of **oil, gas, brine disposal, secondary recovery, or hydrocarbon** storage wells?	Y ☐	N ☐	OOGM, Permits and Bonding, 517-284-6841
Does the project involve plugging or deepening of an **oil or gas** well, or conveying rights in the well as an owner to another person?	Y ☐	N ☐	OOGM, Permits and Bonding, 517-284-6841
Does the project involve changing the status or plugging of a **mineral well**?	Y ☐	N ☐	OOGM, Petroleum & Mining, 517-284-6826
Does the project involve the drilling or deepening of **wells for brine production, solution mining, storage, or as test wells**?	Y ☐	N ☐	OOGM, Petroleum & Mining, 517-284-6826
Does the project involve decommissioning or decontamination of tanks, piping, and/or appurtenances that may have **radioactive levels** above background?	Y ☐	N ☐	OWMRP, Radioactive Protection Programs, 517-284-6581
STORAGE TANKS (CONSTRUCTION AND OPERATION)			
Does the project involve the installation of an **aboveground storage tank** for a flammable or combustible liquid (under 200 degrees Fahrenheit)?	Y ☐	N ☐	Michigan Department of Licensing and Regulatory Affairs (LARA) - Storage Tank Unit, 517-335-7211
Does the project involve the installation of a **compressed natural gas dispensing station** with storage?	Y ☐	N ☐	LARA - Storage Tank Unit, 517-335-7211
Does the project involve the installation of a **liquefied petroleum gas** container filling location or storage location that has a tank with a capacity of more than 2,000 gallons or has two (2) or more tanks with an aggregate capacity of more than 4,000 gallons?	Y ☐	N ☐	LARA - Storage Tank Unit, 517-335-7211
Does the project involve the installation, removal, or upgrade of an **underground storage tank** containing a petroleum product or a hazardous substance?	Y ☐	N ☐	LARA - Storage Tank Unit, 517-335-7211
Does the project involve the **installation** of a **hydrogen system**?	Y ☐	N ☐	LARA - Storage Tank Unit, 517-335-7211

PART II. STANDARD DETAILS

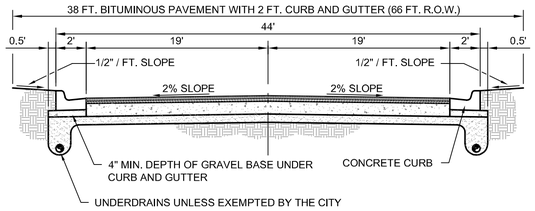

1-1/2" BITUMINOUS AGGREGATE WEARING COURSE M.D.O.T. MIX 36A.
USE 0.10 GAL/SY SS-1h BOND COAT BETWEEN COURSES.
5" BITUMINOUS AGGREGATE LEVELING COURSE M.D.O.T. MIX 11A (2 COURSES).
10" GRAVEL BASE, M.D.O.T. SPECIFICATION NO. 22A.
12" CLASS II SUBBASE (DEPENDING ON SOILS) PREPARED, COMPACTED SUBGRADE.

TYPICAL COLLECTOR OR INDUSTRIAL PAVEMENT CROSS-SECTION

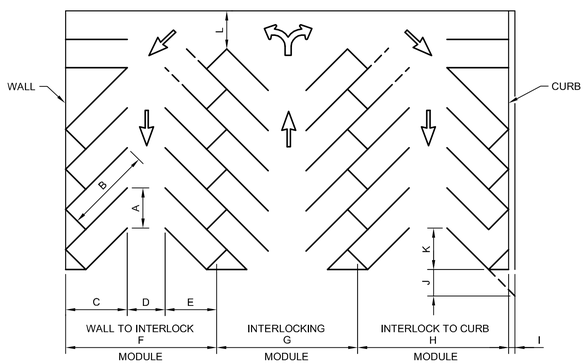

X = STALL NOT ACCESSIBLE IN CERTAIN LAYOUTS

PARKING LOT DIMENSIONS					
DIMENSION	ON DIAGRAM	45°	60°	75°	90°
STALL WIDTH PARALLEL TO AISLE	A	12.7	10.4	9.3	9.0
STALL LENGTH OF LINE	B	25.0	22.0	20.0	18.5
STALL DEPTH TO WALL	C	17.5	19.0	19.5	18.5
AISLE WIDTH BETWEEN STALL LINES	D	12.0	16.0	23.0	26.0
STALL DEPTH, INTERLOCK	E	15.3	17.5	18.8	18.5
MODULE, WALL TO INTERLOCK	F	44.8	52.5	61.3	63.0
MODULE, INTERLOCKING	G	42.6	51.0	61.0	63.0
MODULE, INTERLOCK TO CURB FACE	H	42.8	50.2	58.8	60.5
BUMPER OVERHANG (TYPICAL)	I	2.0	2.3	2.5	2.5
OFFSET	J	6.3	2.7	0.5	0.0
SETBACK	K	11.0	8.3	5.0	0.0
CROSS AISLE, ONE-WAY	L	14.0	14.0	14.0	14.0
CROSS AISLE, TWO-WAY	M	24.0	24.0	24.0	24.0

TYPICAL ANGLED PARKING LAYOUT

NOTE: PARKING DIMENSIONS ARE FOR 9 FOOT WIDE STALLS

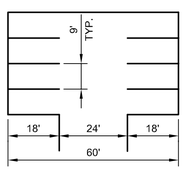

TYPICAL 90° PARKING LAYOUT

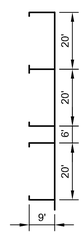

TYPICAL PARALLEL PARKING

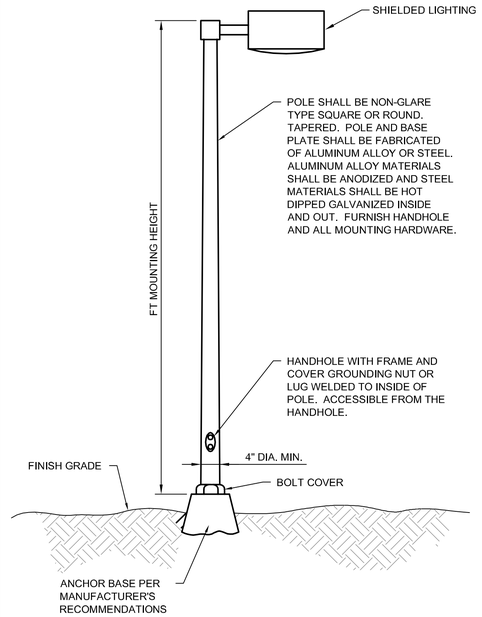

NOTES:
1. NO LIGHT STANDARD SHALL BE MORE THAN 20 FEET IN HEIGHT.
2. PARKING LOT LIGHTING SHALL MEET THE LUMINAIRE REQUIREMENTS OF SECTION 98-83 OF THE ZONING ORDINANCE.

TYPICAL PARKING AREA LIGHTING

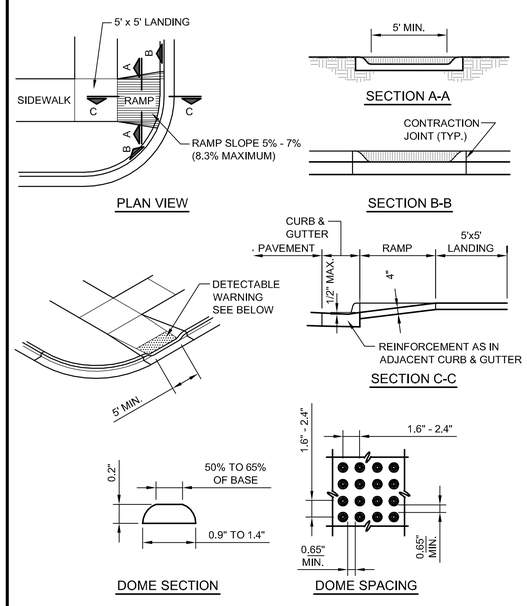

NOTE: SEE MDOT R-28-F SIDEWALK RAMP AND DETECTABLE WARNING DETAILS FOR ADDITIONAL INFORMATION.

SIDEWALK RAMP

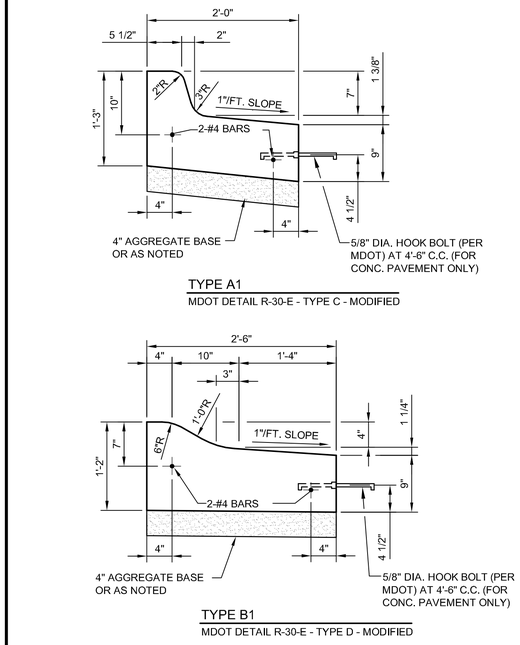

CONCRETE CURB SPILLOUT

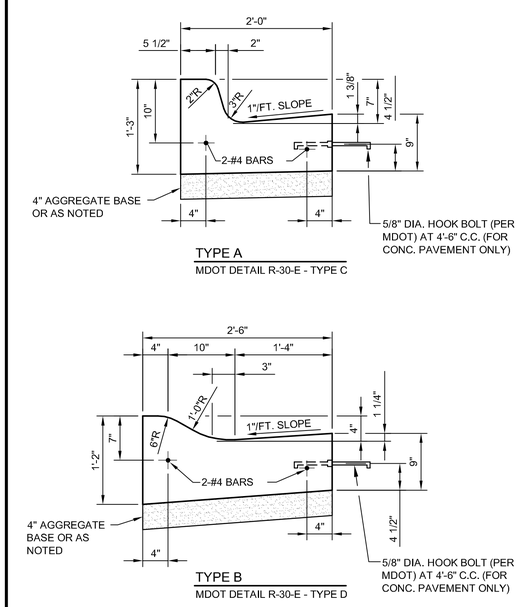

CONCRETE CURB AND GUTTER

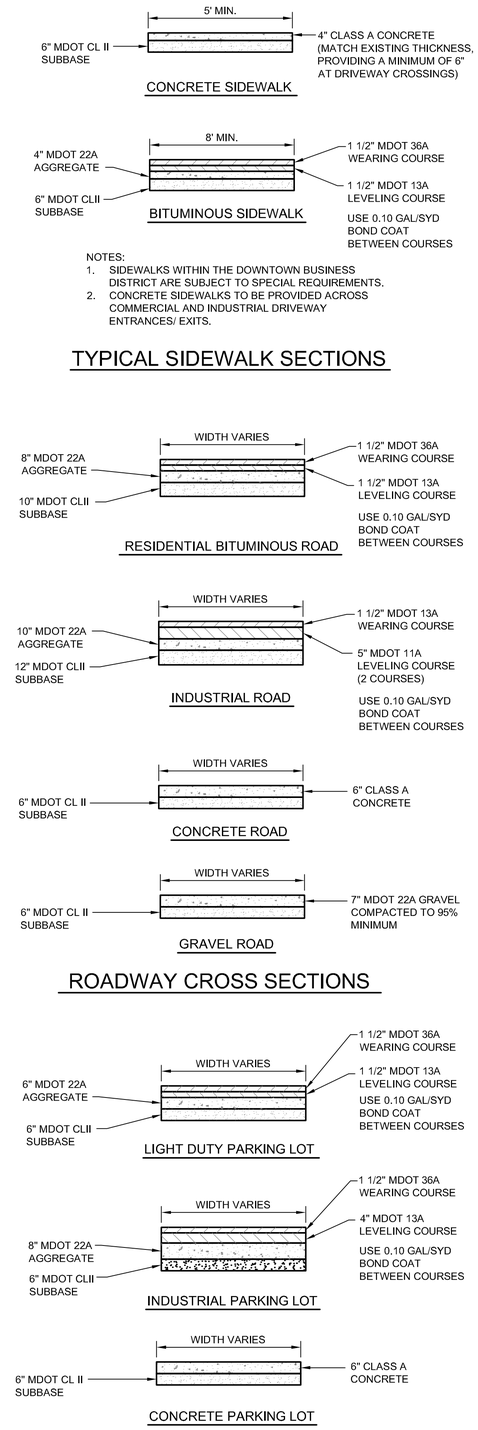

TYPICAL SIDEWALK SECTIONS

ROADWAY CROSS SECTIONS

PARKING LOT CROSS SECTIONS

CITY OF BRIGHTON

ROADWAY, PARKING & SIDEWALK STANDARD DETAILS

Scale:	NONE
Issued Date	MAY - 2014

Thursday, October 02, 2014 10:48:37 AM DRAWING: O:\Projects\Lansing\IER\12766\200-12766-00-000\CAD\SheetFiles\Standards\Brighton-std.DWG

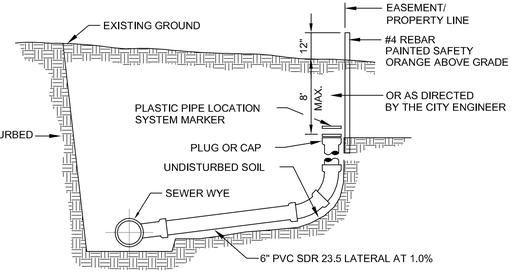

NOTE:
RISER PIPE MAY NOT BE REQUIRED FOR SHALLOW SEWERS AS SHOWN.

SANITARY SEWER LATERAL

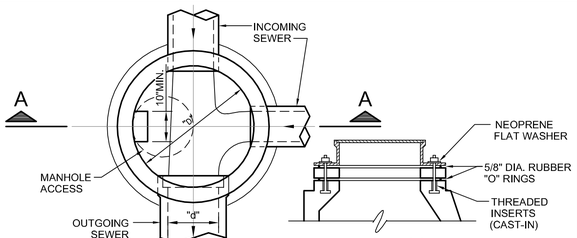

PLAN

WATERTIGHT COVER ANCHORAGE

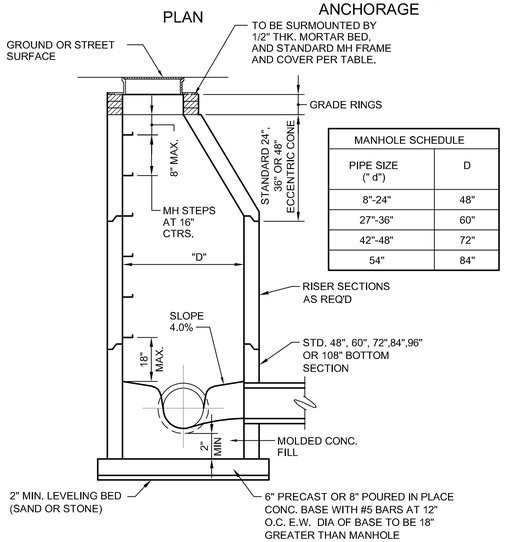

MANHOLE SCHEDULE	
PIPE SIZE (" d")	D
8"-24"	48"
27"-36"	60"
42"-48"	72"
54"	84"

SECTION A-A

NOTES:
1. ALL SANITARY MANHOLES TO BE PRECAST REINFORCED CONCRETE WITH PREMIUM JOINTS. SEE SPECIFICATIONS FOR BASE SLAB AND PIPE OPENINGS AND CONNECTIONS.
2. MANHOLE CONES SHALL BE THE ECCENTRIC TYPE.
3. PROVIDE 6" OF COMPACTED GRANULAR MATERIAL UNDER ALL PRECAST CONCRETE BASE SLABS.
4. FORCE MAINS CONNECT DIRECTLY TO A MANHOLE SHALL BE INSTALLED SO THAT THE ELEVATION OF THE PIPE CROWNS MATCH. THE FORCE MAIN SHALL BE DIRECTED DOWNWARD INTO THE FLOW CHANNEL.
5. FOR SANITARY SEWERS ALL PIPES SHALL ENTER MANHOLE THROUGH RUBBER BOOTED CONNECTION.

FRAME & COVER FOR SANITARY SEWER MANHOLES			
		MANUFACTURER OR EQUAL	
TYPE	TYPE OF COVER	EAST JORDAN	NEENAH
MH	SANITARY - SOLID SELF-SEALING	1040.0000	R-1642
MH	SANITARY - SOLID WATERTIGHT	1040-APT	R-1916-F
CO	SOLID	1574A	R-1973-A

STANDARD MANHOLE

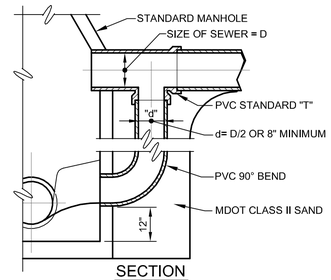

SECTION

REQUIRED WHEN AN INLET PIPE IS 24" OR
MORE ABOVE THE OUTLET PIPE IN A MANHOLE

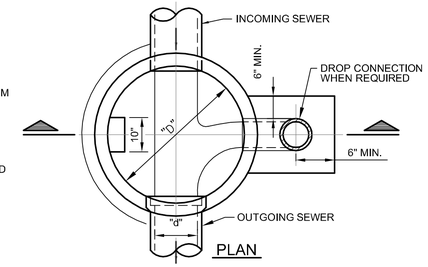

PLAN

EXTERIOR DROP CONNECTION

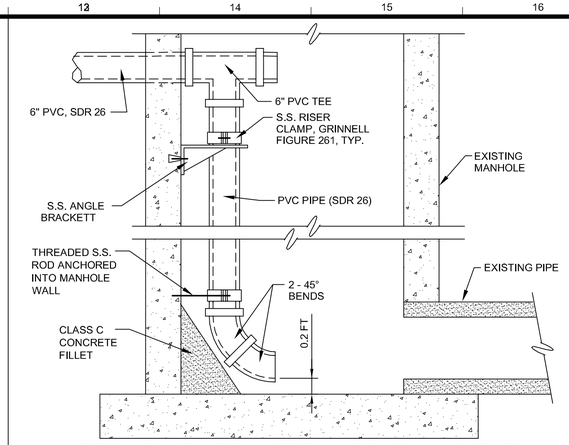

INTERIOR SEWER LATERAL DROP CONNECTION

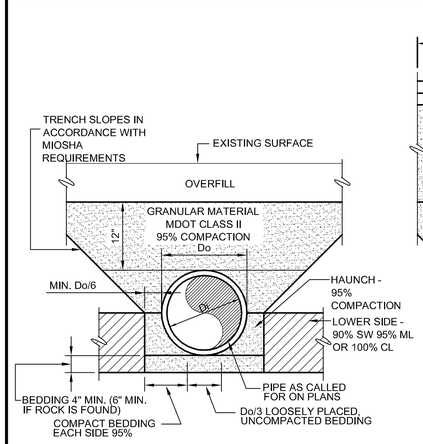

PIPE BEDDING

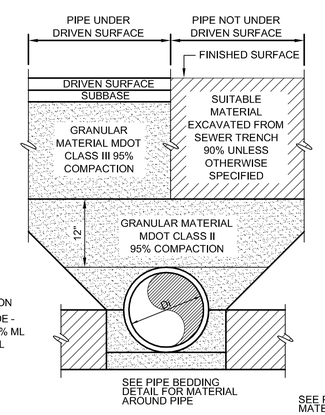

PIPE UNDER/NOT UNDER DRIVEN SURFACE

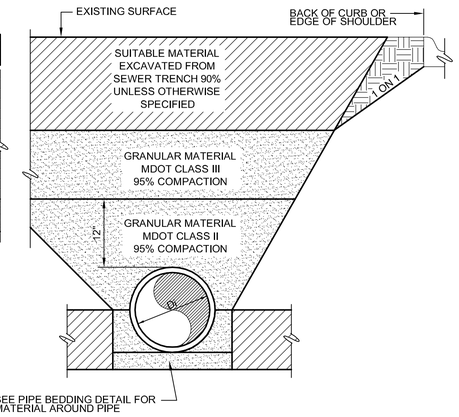

PIPE WITHIN INFLUENCE OF DRIVEN SURFACE

NOTES:
1. COMPACTION PRESENTED AS MINIMUM STANDARD PROCTOR VALUES.
2. MATERIALS AROUND THERMOPLASTIC PIPE WITH DIAMETER < 6 INCHES SHALL PASS 0.5 INCH SIEVE, MATERIALS AROUND OTHER PIPES SHALL PASS 1.5 INCH SIEVE.
3. MATERIALS AROUND HDPE PIPE TO BE MDOT 6A OR 21AA.
4. DRIVEN SURFACE IS DRIVEWAY, PARKING AREA, ROAD BED OR SHOULDER.
5. UTILITY TRENCHES LOCATED WITHIN A MDOT ROW SHALL CONFORM TO MDOT STANDARD DETAIL R-83.
6. TRACER WIRE IS REQUIRED ON FORCE MAIN ONLY AND SHALL BE BROUGHT TO GRADE AT A MINIMUM EVERY 1000 FEET IN A APPROVED CAST IRON TRACER WIRE BOX ENCASED IN CONCRETE OR WITH AN APPROVED GREEN MARKER POST.

TRENCH EXCAVATION & PIPE BEDDING

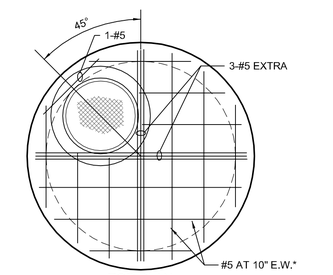

TOP PLAN * USE #5 AT 6" FOR D=8'-0"

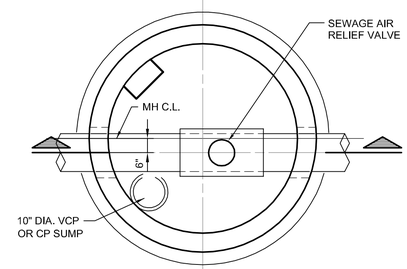

SECTIONAL PLAN

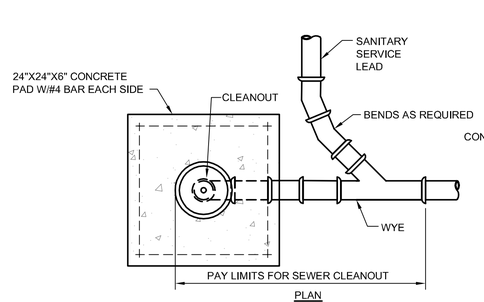

PLAN

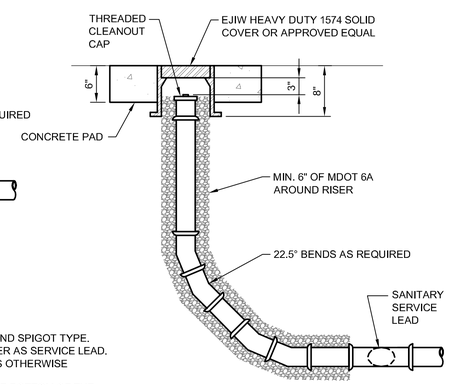

ELEVATION

NOTES:
1. ALL CONNECTION SHALL BE BELL AND SPIGOT TYPE.
2. CLEANOUT IS TO BE SAME DIAMETER AS SERVICE LEAD.
3. CONCRETE PAD REQUIRED UNLESS OTHERWISE DETERMINED BY THE CITY.
4. THERE MUST BE A 3" GAP FROM THE BOTTOM OF THE CLEAN OUT LID TO THE TOP OF THE THREADED CAP.

SEWER CLEANOUT DETAIL

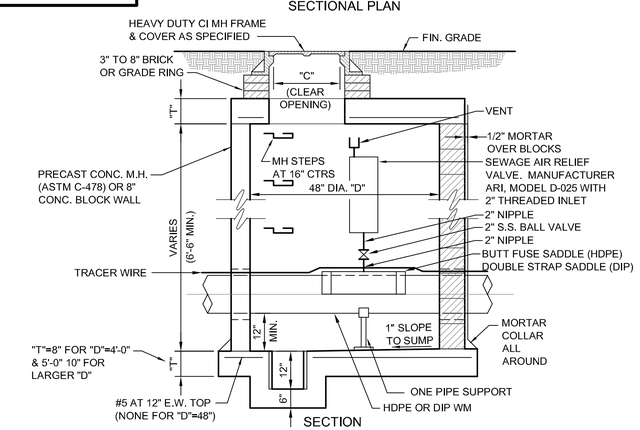

SECTION

NOTE: ALL PLUMBING MATERIALS TO BE NON-CORROSIVE, ALL FITTINGS SHALL BE STAINLESS STEEL.

AIR RELIEF STRUCTURE

CITY OF BRIGHTON

SANITARY SEWER
STANDARD DETAILS

Scale: NONE
Issued Date MAY - 2014

Thursday, October 02, 2014 10:33:13 AM DRAWING: O:\Projects\Lansing\IER\12766\200-12766-00-000\CAD\SheetFiles\Standards\Brighton-std.DWG

MANHOLE FRAME & COVER & CATCH BASIN INLETS					
TYPE	LOCATION	MANUFACTURER OR EQUAL		TYPE OF COVER OR INLET	MAXIMUM DRAINAGE AREA (ACRES)
		EAST JORDAN	NEENAH		
MH	ALL	1040	R-1916 F1	SANITARY-SOLID SELF-SEALING STORM-VENTED	N/A
CB	TYPE A CURB	7000-T1-M1	R-3070	FLAT GRATE WITH VERT. OPEN BACK	0.71
CB	TYPE B CURB	7065-T1-M1	R-3034-B	FLAT GRATE WITH ROLL BACK	0.87
CB	PAVEMENT/ SHOULDER	1020-M1	R-2060-D	FLAT GRATE	0.66
CB	OPEN AREA	1020-01	R-2560-D	BEEHIVE GRATE 4" HIGH	0.63
CB	GUTTER	5100	R-3238	CONCAVE INLET	0.96

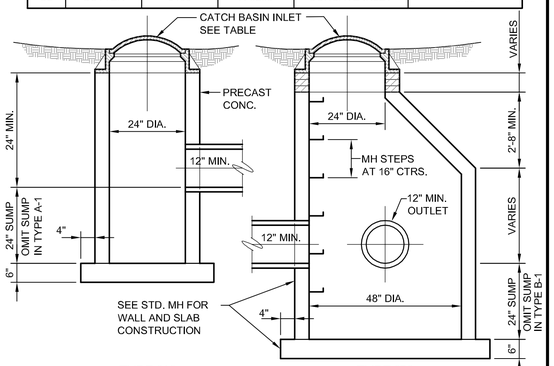

NOTE:
TYPE A-1 EQUAL TO TYPE "A" EXCLUDING 24" SUMP BUT ADD ON BOTTOM CONC. FILLET.

NOTE:
TYPE B-1 EQUAL TO TYPE "B" EXCLUDING 24" SUMP BUT ADD ON BOTTOM CONC. FILLET.

CATCH BASIN

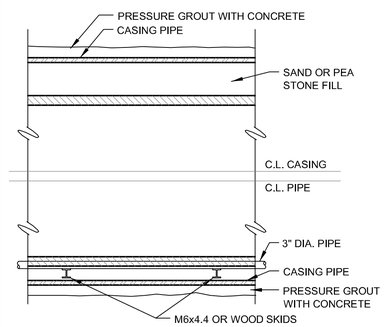

TABLE	
"X"	"Y"(MIN)
6"	20"
8"-12"	24"
14"-15"	30"
18"-21"	36"
24"	42"
27"-30"	48"
33"-36"	60"
42"	66"
48"	72"
54"	84"
60"	90"
66"	96"
72"	108"
78"	114"

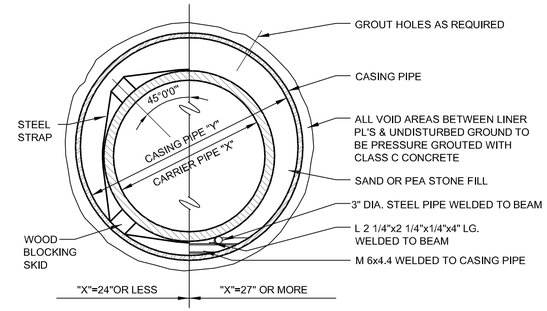

CASING PIPE AT HIGHWAY AND RAILROAD CROSSING

NO SCALE

NOTES:
1. SEE SPECIFICATIONS FOR ALTERNATE CONSTRUCTION METHODS.
2. BORING SHALL BE AT 90 DEGREES TO ALL CROSSINGS UNLESS OTHERWISE APPROVED. THE BORING OF THE HOLE AND INSTALLATION OF THE CASING PIPE SHALL BE SIMULTANEOUS. BORE HOLE DIAMETER SHALL ESSENTIALLY BE THE SAME AS THE OUTSIDE DIAMETER OF THE CASING PIPE TO BE INSTALLED.
3. BORING TO EXTEND A MINIMUM OF 10' OUTSIDE THE EDGE OF PAVEMENT.
4. CASING SPACERS SHALL BE RESTRAINED-TYPE BOLTED SPACERS AND SHALL HAVE A MAXIMUM SPACING AS NOTED BELOW OR AS RECOMMENDED BY MANUFACTURER, WHICHEVER IS CLOSER. PIPE CASING SPACERS SHALL BE EQUIVALENT TO RANGER PLASTIC CASING SPACERS AS MANUFACTURED BY PIPELINE SEAL AND INSULATOR, INC, OR APPROVED EQUAL.
   4.1. SPACER SHALL BE PLACED MAXIMUM 1' ON EACH SIDE OF CARRIER PIPE JOINT.
   4.2. TYPICAL 6' MAXIMUM SPACING BETWEEN SPACERS.
   4.3. MINIMUM ONE CASING SPACER WITHIN 1' OF EACH END OF CASING.
5. INSTALL STEEL ASSEMBLY FOR CARRIER PIPE SUPPORT AS SHOWN IN DRAWING AND DETAILED IN SPECIFICATIONS. SKIDS ARE REQUIRED TO EXTEND TO FULL LENGTH OF THE CASING.
6. CASING END SEALS SHALL BE SYNTHETIC NEOPRENE RUBBER PULL-ON TYPE END SEALS WITH STAINLESS STEEL BANDS, AS MANUFACTURED BY PIPELINE SEAL AND INSULATOR, INC, OR APPROVED EQUAL.

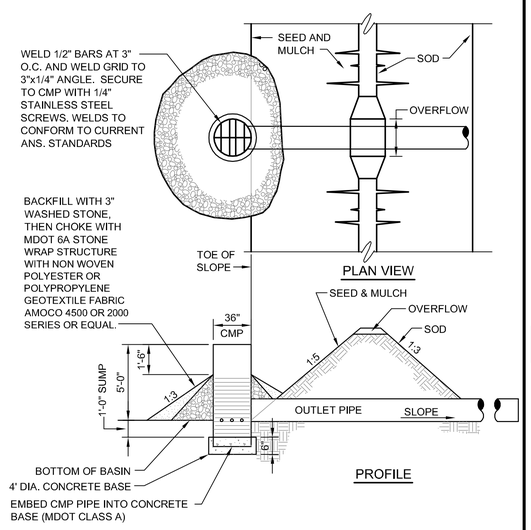

OUTLET CONTROL STRUCTURE

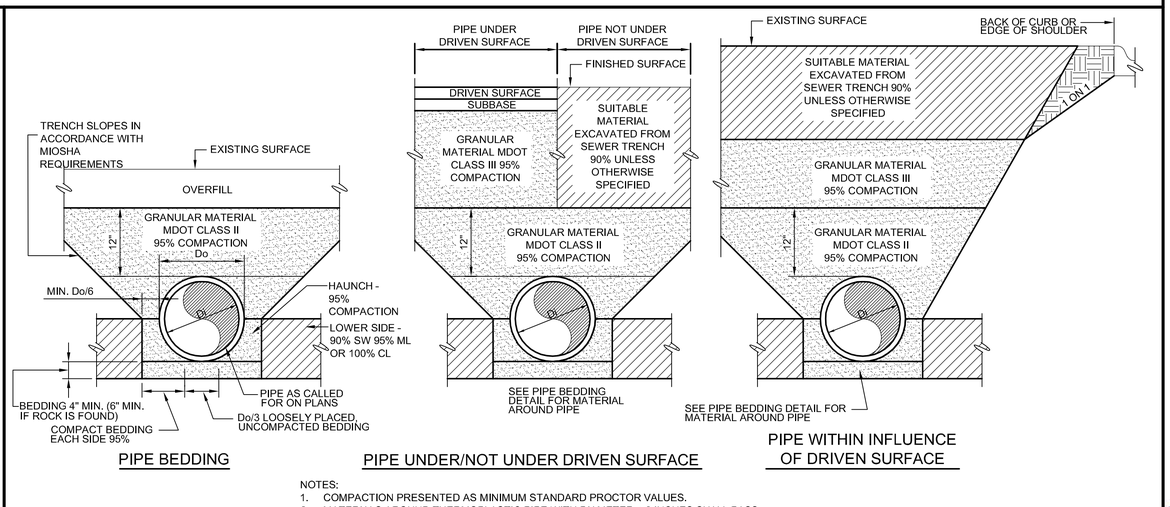

NOTES:
1. COMPACTION PRESENTED AS MINIMUM STANDARD PROCTOR VALUES.
2. MATERIALS AROUND THERMOPLASTIC PIPE WITH DIAMETER < 6 INCHES SHALL PASS 0.5 INCH SIEVE, MATERIALS AROUND OTHER PIPES SHALL PASS 1.5 INCH SIEVE.
3. MATERIALS AROUND HDPE PIPE TO BE MDOT 6A OR 21AA.
4. DRIVEN SURFACE IS DRIVEWAY, PARKING AREA, ROAD BED OR SHOULDER.
5. UTILITY TRENCHES LOCATED WITHIN A MDOT ROW SHALL CONFORM TO MDOT STANDARD DETAIL R-83.

TRENCH EXCAVATION & PIPE BEDDING

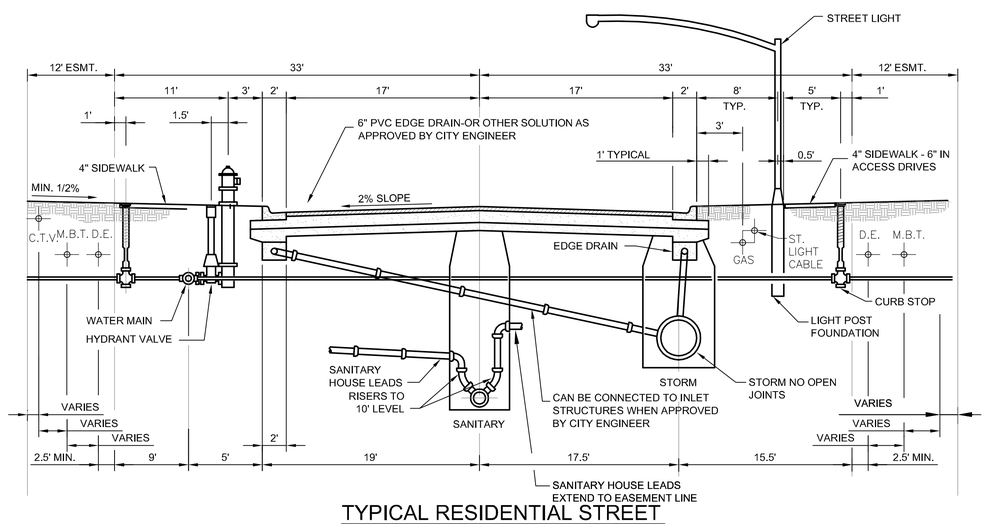

TYPICAL RESIDENTIAL STREET

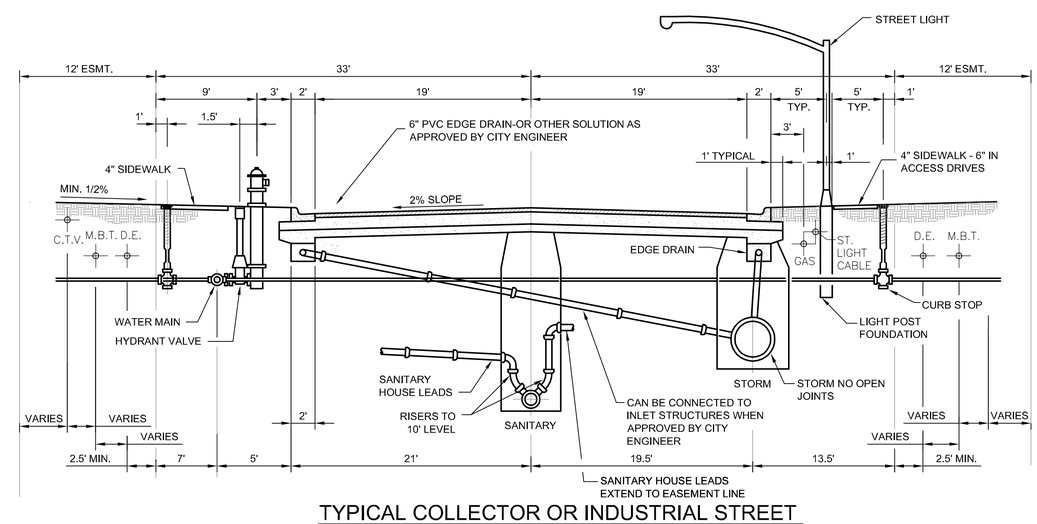

TYPICAL COLLECTOR OR INDUSTRIAL STREET

CITY OF BRIGHTON

STORM SEWER & STREET DETAILS STANDARD DETAILS

Scale:	PARKING
Issued Date	MAY - 2014

Thursday, October 02, 2014 10:48:02 AM DRAWING: O:\Projects\Lansing\IER\12766\200-12766-00-000\CAD\SheetFiles\Standards\Brighton-std.DWG

PIPE RESTRAINT SCHEDULE

GROUND BURIED PRESSURE PIPE - POLYETHYLENE ENCASED DUCTILE IRON PIPE

PIPE DIAMETER	TEES, 90° BENDS	45° BENDS	22-1/2° BENDS	11-1/4° BENDS	DEAD ENDS	REDUCERS (ONE SIZE REDUCTION)*	REDUCERS (TWO SIZE REDUCTIION)*
4	13	5	3	1	40	--	--
6	19	8	4	2	58	31	--
8	24	10	5	2	75	30	70
12	34	14	7	3	107	57	116
16	43	18	9	4	139	59	137
20	52	22	10	5	169	59	134
24	61	25	12	6	199	60	132
30	73	30	15	7	242	85	168
36	84	35	17	8	281	84	168

1. LENGTHS OF PIPE RESTRAINT ARE GIVEN IN FEET.
2. IF REQUIRED PIPE DIAMETER IS NOT LISTED IN THIS TABLE, THE NEXT LARGEST PIPE DIAMETER SHALL BE USED.
3. THIS TABLE IS BASED ON A TEST PRESSURE OF 180 PSI (OPERATING PRESSURE PLUS WATER HAMMER. FOR OTHER TEST PRESSURES, ALL VALUES TO BE INCREASED OR DECREASED PROPORTIONALLY.
4. THE VALUES PROVIDED OF RESTRAINT LENGTH ARE IN EACH DIRECTION FROM THE POINT OF DEFLECTION OR TERMINATION EXCEPT FOR TEES, AT WHICH ONLY THE BRANCH IN THE DIRECTION OF THE STEM.
5. IF TIE RODS ARE USED, USE FOUR RODS MINIMUM AND ADD 1/8-INCH TO BAR DIAMETER AS CORROSION ALLOWANCE.

* SIZE REDUCTION IS BASED UPON THE PIPE DIAMETER SHOWN IN THIS TABLE.

BASED UPON:
INTERNAL PRESSURE: 180
PIPE DEPTH: 5
BEDDING CLASS: TYPE 4
SOIL TYPE: GOOD SAND
SAFETY FACTOR: 2

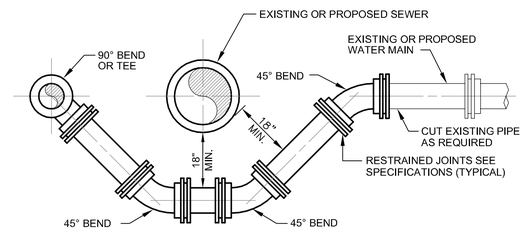

WATER MAIN UTILITY OFFSET

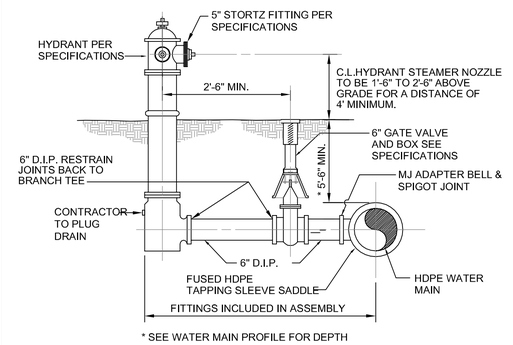

* SEE WATER MAIN PROFILE FOR DEPTH

WITH FUSED HDPE SADDLE

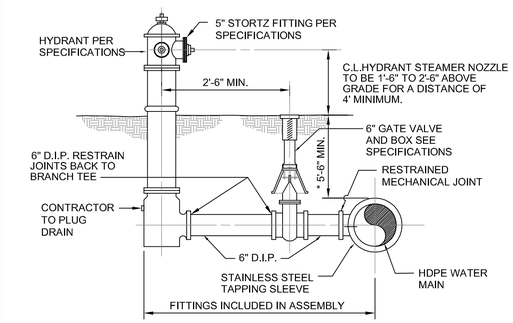

* SEE WATER MAIN PROFILE FOR DEPTH

WITH STAINLESS STEEL SADDLE

NOTE: USE OF HDPE FOR WATER MAIN APPLICATION REQUIRES SPECIAL APPROVAL FROM THE CITY OF BRIGHTON.

FIRE HYDRANT ASSEMBLY CONNECTION TO HDPE WATER MAIN

NO SCALE

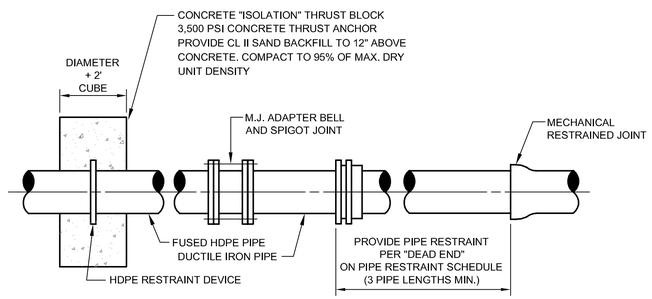

NOTE: USE OF HDPE FOR WATER MAIN APPLICATION REQUIRES SPECIAL APPROVAL FROM THE CITY OF BRIGHTON.

HDPE TO DIP PIPE CONNECTION DETAIL

NO SCALE

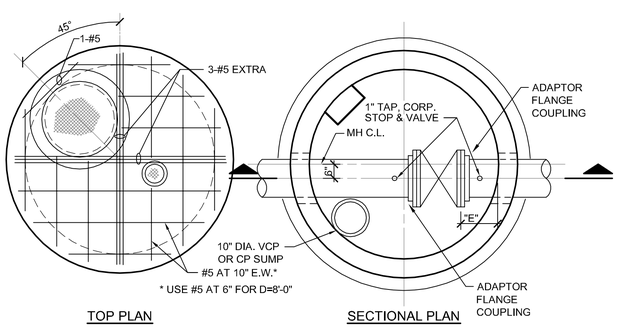

TOP PLAN

SECTIONAL PLAN

VALVE SIZE	M.H. DIA."D"	FRAME AND COVER "C" (MIN)	"E" BUTTE -RFLY VALVE	"E" OTHER VALVES
4"-8"	4'-0"	22"	—	12"
10"-12"	5'-0"	22"	18"	12"
14"-16"	6'-0"	24"	18"	18"
18"-20"	7'-0"	30"	24"	18"
24"	7'-0"	32"	24"	18"
30"-36"	8'-0"	22"	30"	—

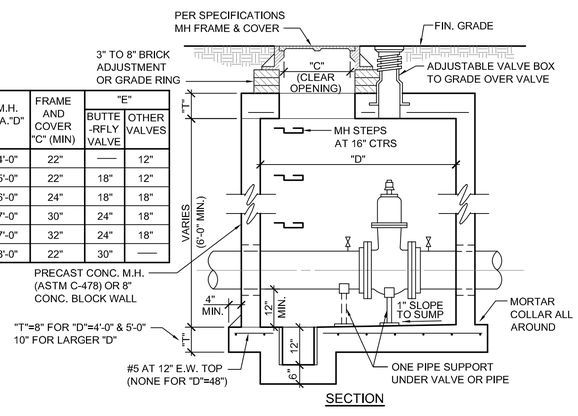

SECTION

VALVE MANHOLE

NO SCALE

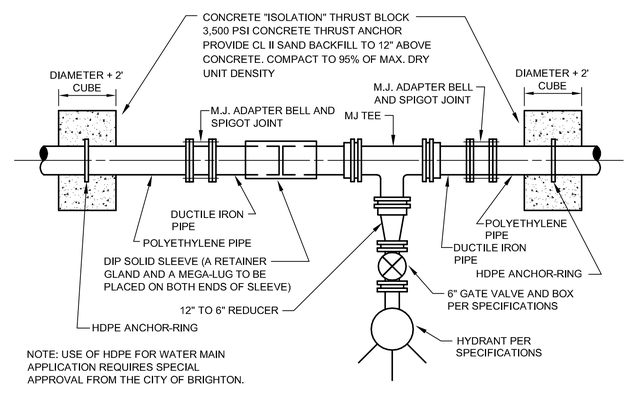

NOTE: USE OF HDPE FOR WATER MAIN APPLICATION REQUIRES SPECIAL APPROVAL FROM THE CITY OF BRIGHTON.

FIRE HYDRANT ASSEMBLY DIP TEE CONNECTION TO HDPE WATER MAIN

NO SCALE

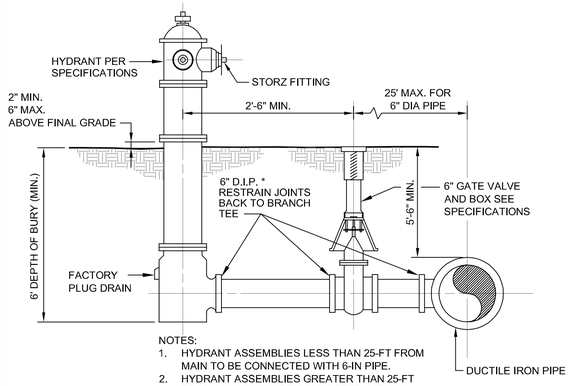

NOTES:
1. HYDRANT ASSEMBLIES LESS THAN 25-FT FROM MAIN TO BE CONNECTED WITH 6-IN PIPE.
2. HYDRANT ASSEMBLIES GREATER THAN 25-FT FROM MAIN SHALL BE CONNECTED WITH AN 8-IN PIPE. THIS 8-IN PIPE MAY BE REDUCED TO 6-IN PIPE WITHIN 25-FT FROM THE HYDRANT.

FIRE HYDRANT ASSEMBLY

NO SCALE

CITY OF BRIGHTON

WATER MAIN - SHEET 1 OF 2
STANDARD DETAILS

Scale: NONE
Issued Date MAY - 2014

Thursday, October 02, 2014 11:35:53 AM DRAWING: O:\Projects\Lansing\IER\12766\200-12766-00-000\CAD\SheetFiles\Standards\Brighton-std.DWG

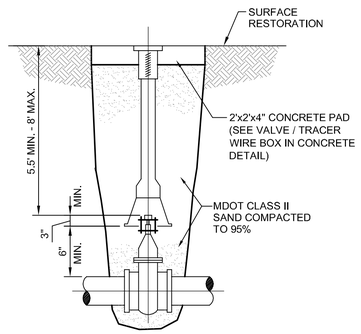

NOTES:
1. VALVE BOX SHALL NOT REST ON VALVE OR MAIN LINE PIPE.
2. A VALVE STEM EXTENSION WITH CENTERING RING IS REQUIRED FOR VALVES BURIED DEEPER THAN 6'.

GATE VALVE AND BOX

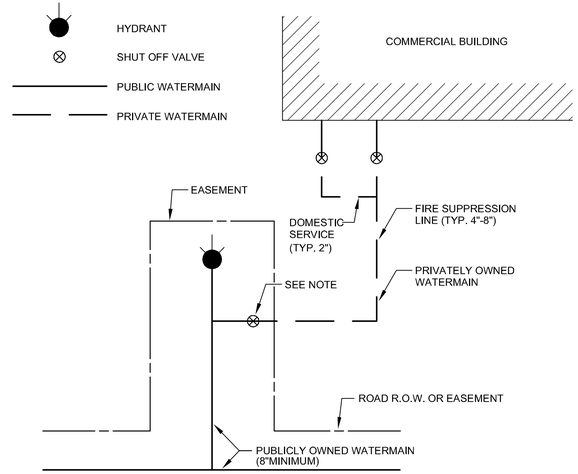

NOTE: PUBLICLY OWNED SHUT OFF VALVE TO BE LOCATED IN EASEMENT.

COMMERCIAL BUILDING WATER SERVICE LAYOUT

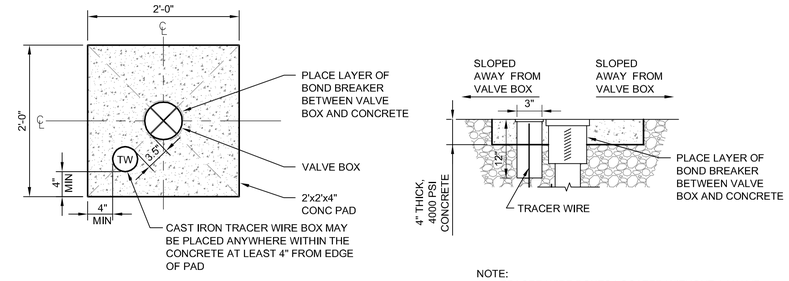

NOTE: ALL BOXES & ADJOINING TW BOXES SHALL BE ENCASED IN A CONC. PAD UNLESS OTHERWISE DETERMINED BY THE CITY.

PLAN

NOTE:
1. TRACER WIRE BOXES LOCATED WITHOUT A VALVE BOX ONLY REQUIRE AN 18" X 18" CONCRETE PAD.
2. TRACER WIRE BOX SHALL HAVE A LOCKING LID W/STANDARD AWWA PENTAGON KEY.

SECTION

GATE VALVE/TRACER WIRE BOX IN CONCRETE DETAIL

NO SCALE

PIPE BEDDING

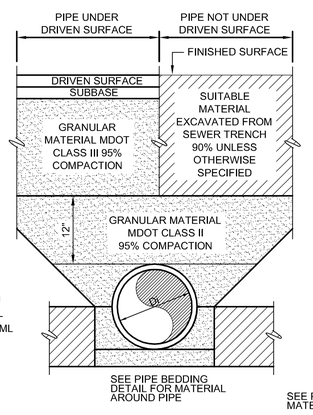

PIPE UNDER/NOT UNDER DRIVEN SURFACE

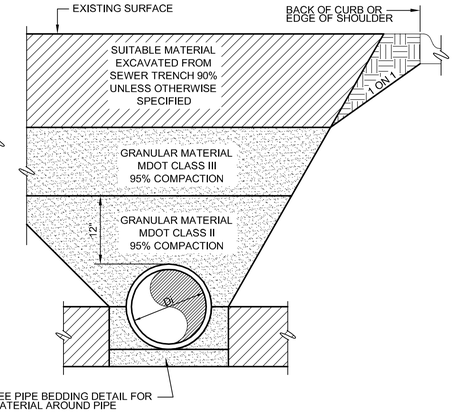

PIPE WITHIN INFLUENCE OF DRIVEN SURFACE

NOTES:
1. COMPACTION PRESENTED AS MINIMUM STANDARD PROCTOR VALUES.
2. MATERIALS AROUND THERMOPLASTIC PIPE WITH DIAMETER < 6 INCHES SHALL PASS 0.5 INCH SIEVE, MATERIALS AROUND OTHER PIPES SHALL PASS 1.5 INCH SIEVE.
3. MATERIALS AROUND HDPE PIPE TO BE MDOT 6A OR 21AA.
4. DRIVEN SURFACE IS DRIVEWAY, PARKING AREA, ROAD BED OR SHOULDER.
5. UTILITY TRENCHES LOCATED WITHIN A MDOT ROW SHALL CONFORM TO MDOT STANDARD DETAIL R-83.

TRENCH EXCAVATION & PIPE BEDDING

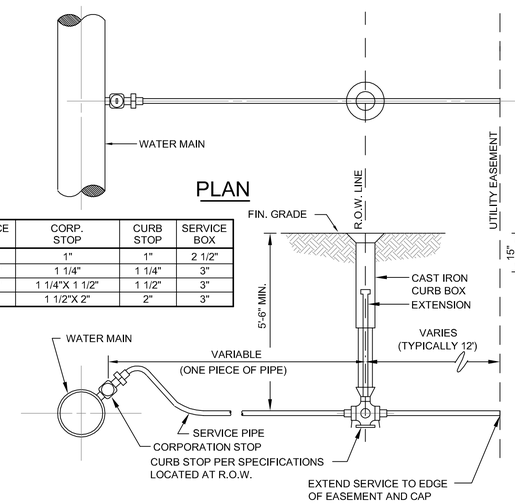

SERVICE PIPE	CORP. STOP	CURB STOP	SERVICE BOX
1"	1"	1"	2 1/2"
1 1/4"	1 1/4"	1 1/4"	3"
1 1/2"	1 1/4"X 1 1/2"	1 1/2"	3"
2"	1 1/2"X 2"	2"	3"

SECTION
WATER SERVICE LATERAL

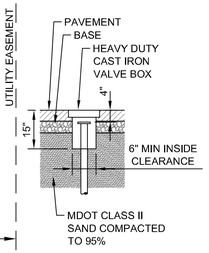

CURB STOP IN PAVEMENT

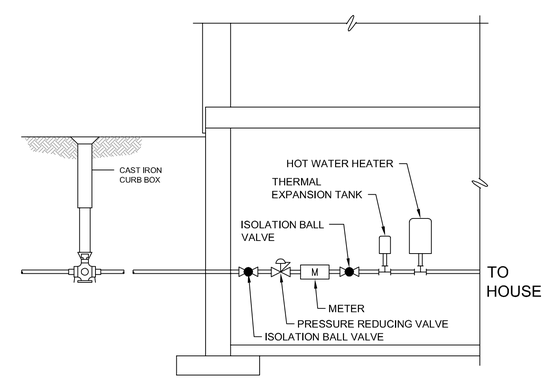

PRIVATE RESIDENCE
PRESSURE REDUCING VALVE (PRV)

CITY OF BRIGHTON

WATER MAIN - SHEET 2 OF 2
STANDARD DETAILS

Scale: NONE
Issued Date MAY - 2014

Thursday, October 02, 2014 10:35:05 AM DRAWING: O:\Projects\Lansing\ER\12766\200-12766-00-000\CAD\SheetFiles\Standards\Brighton-std.DWG

PART III. TECHNICAL SPECIFICATIONS

SECTION 01330 - SUBMITTALS

PART 1 - GENERAL

1.1 SUMMARY

A. This Section specifies administrative and procedural requirements for submittals, including, but not necessarily limited to, the following:
   1. CONTRACTOR's Construction Schedule.
   2. Shop Drawings.

1.2 SUBMITTALS

A. Bonds and Insurance Certificates shall be submitted to and approved by OWNER and ENGINEER prior to the initiation of any construction on Site.

B. Permits, Licenses, and Certificates: For OWNER's records, submit copies of permits, licenses, certifications, inspection reports, releases, jurisdictional settlements, notices, receipts for fee payments, judgments, and similar documents; correspondence and records established in conjunction with compliance with standards; and regulations bearing upon performance of the Work.

1.3 SUBMITTAL PROCEDURES

A. Coordination:
   1. Coordinate preparation and processing of submittals with performance of construction activities. Transmit each submittal sufficiently in advance of performance of related construction activities to avoid delay.
   2. Coordinate each submittal with fabrication, purchasing, testing, delivery, other submittals, and related activities that require sequential activity.
   3. Coordinate transmittal of different types of submittals for related elements of the Work so processing will not be delayed by the need to review submittals concurrently for coordination.
   4. ENGINEER reserves the right to withhold action on a submittal requiring coordination with other submittals until related submittals are received.

B. Processing:
   1. Allow sufficient review time so that installation shall not be delayed as a result of the time required to process submittals, including time for resubmittals.
   2. ENGINEER will review and return submittals with reasonable promptness, or advise CONTRACTOR when a submittal being processed must be delayed for coordination or receipt of additional information by putting the submittal "On Hold" and returning a transmittal identifying the reasons for the delay.

C. Submittal Preparation:
   1. Place a permanent label or title block on each submittal for identification. Indicate the name of the entity that prepared each submittal on the label or title block.
   2. Provide a space approximately 4 inches by 5 inches on the label or beside the title block on submittals not originating from CONTRACTOR to record CONTRACTOR's review and approval markings and the action taken.

3. Include the following information on the label for processing and recording action taken.
   a. Project name.
   b. Date.
   c. Name and address of ENGINEER.
   d. Name and address of CONTRACTOR.
   e. Name and address of subcontractor.
   f. Name and address of supplier.
   g. Name of manufacturer.
   h. Number and title of appropriate Specification Section.
   i. Drawing number and detail references, as appropriate.
4. Any markings done by CONTRACTOR shall be done in a color other than red. Red is reserved for ENGINEER's marking.
5. The number of copies to be submitted will be determined at the pre-construction conference. Reproducibles may be submitted and will be marked and returned to CONTRACTOR. Blue or black line prints shall be submitted in sufficient quantity for distribution to ENGINEER and OWNER recipients.

D. Submittal Transmittal:
1. Package each submittal appropriately for shipping and handling. This shall include an index either on the transmittal or within the submittal itself. Transmit each submittal from CONTRACTOR to ENGINEER using a transmittal form. Submittals received from sources other than CONTRACTOR will be returned without action. Use separate transmittals for items from different specification sections. Number each submittal consecutively. Resubmittals should have the same number as the original, plus a letter designation for each resubmittal (i.e., 7-A, 7-B, etc.).
2. Indicate on the transmittal relevant information and requests for data. On the form, or separate sheet, record deviations from Contract Document requirements, including minor variations and limitations. Include CONTRACTOR's certification that information complies with Contract Document requirements. On resubmittal, all changes shall be clearly identified for ease of review. Resubmittals shall be reviewed for the clearly identified changes only. Any changes not clearly identified will not be reviewed and original submittal shall govern.

1.4 CONSTRUCTION SCHEDULE

A. Bar Chart Schedule:
1. Prepare a fully developed, horizontal bar chart type Construction Schedule. Submit within 30 days of the date established for "Commencement of the Work."
2. Provide a separate time bar for each significant construction activity. Provide a continuous vertical line to identify the first working day of each week. Use the same breakdown of units of the Work as indicated on Schedule of Values.
3. Prepare Schedule on a sheet, or series of sheets, of stable transparency or other reproducible media, of sufficient width to show data for the entire construction period.
4. Secure time commitments for performing critical elements of the Work from parties involved. Coordinate each element on Schedule with other construction activities; include minor elements involved in the sequence of the Work. Show each activity in proper sequence. Indicate graphically sequences necessary for completion of related portions of the Work.
5. Coordinate Construction Schedule with Schedule of Values, list of subcontracts, Submittal Schedule, progress reports, payment requests, and other schedules.

6. Indicate completion in advance of the date established for Substantial Completion. Indicate Substantial Completion on Schedule to allow time for ENGINEER's procedures necessary for certification of Substantial Completion.

B. Schedule Updating: Revise Schedule after each meeting or activity where revisions have been recognized or made within 2 weeks following the meeting or activity.

1.5 SHOP DRAWINGS

A. Submit newly prepared information, drawn to accurate scale. Highlight, encircle, or otherwise indicate deviations from the Contract Documents. Do not reproduce Contract Documents or copy standard information as the basis of Shop Drawings. Standard information prepared without specific reference to the Project is not considered Shop Drawings.

B. Shop Drawings include fabrication and installation drawings, setting diagrams, schedules, patterns, templates, and similar drawings. Include the following information:
   1. Dimensions.
   2. Identification of products and materials included.
   3. Compliance with specified standards.
   4. Notation of coordination requirements.
   5. Notation of dimensions established by field measurement.

C. Shop Drawings shall indicate shop painting requirements to include type of paint and manufacturer.

D. Manufacturer's catalog sheets, brochures, diagrams, illustrations, and other standard descriptive data shall be clearly marked to identify pertinent materials, products, or models. Delete information which is not applicable to the Work by striking or cross-hatching.

E. Measurements given on Shop Drawings or standard catalog sheets, as established from Contract Drawings and as approved by ENGINEER, shall be followed. When it is necessary to verify field measurements, they shall be checked and established by CONTRACTOR. The field measurements so established shall be followed by CONTRACTOR and by all affected trades.

F. Sheet Size: Except for templates, patterns, and similar full-size Drawings, submit Shop Drawings on sheets at least 8-1/2 inches by 11 inches but no larger than 36 inches by 48 inches.

G. Do not use Shop Drawings without an appropriate final stamp indicating action taken in connection with construction.

1.6 ENGINEER'S ACTION

A. Except for submittals for record, information or similar purposes, where action and return is required or requested, ENGINEER will review each submittal, mark to indicate action taken, and return promptly.
   1. Compliance with specified characteristics is CONTRACTOR's responsibility.

B. Action Stamp: ENGINEER will stamp each submittal with a uniform, self-explanatory action stamp. The stamp will be appropriately marked, as follows, to indicate the action taken:

1. Final Unrestricted Release: Where submittals are marked "No Exceptions Taken," that part of the Work covered by the submittal may proceed provided it complies with requirements of the Contract Documents; final acceptance will depend upon that compliance.
2. Final-But-Restricted Release: When submittals are marked "Furnish as Corrected," that part of the Work covered by the submittal may proceed, provided it complies with notation or corrections on the submittal and requirements of the Contract Documents; final acceptance will depend on that compliance.
3. Returned for Resubmittal: When submittal is marked "Rejected" or "Revise and Resubmit," do not proceed with that part of the Work covered by the submittal, including purchasing, fabrication, delivery, or other activity. Revise or prepare a new submittal in accordance with the notations; resubmit without delay. Repeat if necessary to obtain a different action mark.
    a. Do not permit submittals marked "Rejected" or "Revise and Resubmit" to be used at Site, or elsewhere where Work is in progress.
4. Other Action: Where a submittal is primarily for information or record purposes, special processing or other activity, the submittal will be returned, marked "Acknowledge Receipt."
5. The approval of ENGINEER shall not relieve CONTRACTOR of responsibility for errors on Drawings or submittals as ENGINEER's checking is intended to cover compliance with Drawings and Specifications and not enter into every detail of the shop work.

PART 2 - PRODUCTS

NOT USED

PART 3 - EXECUTION

NOT USED

END OF SECTION 01330

SECTION 02441 - HORIZONTAL DIRECTIONAL DRILLING

PART 1 - GENERAL

1.1 SUMMARY

A. Section Includes: Specifications for installation of pipelines by horizontal directional drilling where called for on Drawings or chosen by CONTRACTOR.
   1. Work shall include piping connections to existing piping or to pipes installed by other methods.
      a. For potable water mains, Work shall include pressure testing, cleaning and disinfection as required in Section 221113_Water Distribution Piping.
      b. For pumping mains, Work shall include all testing as required in Section 221313_Sanitary Sewers.
      c. For storm sewer, Work shall include all testing as required in Section 334100_Storm Utility Drainage Piping.

B. Products Installed But Not Supplied Under This Section:
   1. Unless otherwise noted on Drawings, or stated in this Section, all piping shall be furnished under the below sections and installed under this section.
      1) Section 221113_Water Distribution Piping
      2) Section 221313_Sanitary Sewers
      3) Section 334100_Storm Utility Drainage Piping
   2. All necessary joint and coupling materials, including bolts, nuts, gaskets, wall castings or sleeves, supports, anchors, blocking harnesses and other necessary closure pipe sections, and standard or special fittings shall be furnished under the Specification for the piping type.
      1) Section 221113_Water Distribution Piping
      2) Section 221313_Sanitary Sewers
      3) Section 334100_Storm Utility Drainage Piping

1.2 SCHEDULING

A. CONTRACTOR shall notify City of Brighton at least 5 working days before beginning Work under this Section.

B. CONTRACTOR shall notify the Livingston County Road Commission 5 days prior to beginning Work under this Section.

1.3 PROJECT CONDITIONS

A. Safety Requirements: All operations shall be conducted so as not to interfere with, interrupt, or endanger the operation of roadways, or damage, destroy, or endanger the integrity of roadway.

B. At all times when Work is being progressed, a field supervisor for Work with no less than 12 months experience in the operation of the equipment being used shall be present. The machine operator also shall have no less than 12 months experience in the operation of the equipment being used.

1.4 ACTION SUBMITTALS

A. Pipe Logs: The requirements for the necessary pipe location logs are found in detail under Field Quality Control. Submit a written report to ENGINEER documenting location and depth of pipe.
   1. Submit logs and summary of stresses on pipe during installation

B. Equipment Data: Furnish data on tracking systems that will be used. Data shall include depth and accuracy capabilities of equipment.

C. Drilling Fluids: Submit manufacturer's data.

D. Pipe Design: Submit design calculations.

E. Pipe: Submit the proposed pipe material including method to be used for joining the pipe segments.

1.5 REFERENCES

A. Reference Standards:
   1. Driscopipe, Inc., "Technical Note #41," dated September 1993, may be used as guideline for HDPE pipe design.

PART 2 - PRODUCTS

2.1 DRILLING FLUID

A. Drilling fluid shall be bentonite clay mixture. CONTRACTOR may use a polymer additive at CONTRACTOR's option.

2.2 PIPE

A. Pipe shall be DIP or HDPE as specified in Section 221113 Water Distribution and Section 221313_Sanitary Sewers.
   1. Ductile Iron pipe shall be pressure class 350 or greater with joints designed specifically for directionally drilling applications.
   2. HDPE pipe shall be provided to meet the design system pressures, match Ductile Iron Pipe Size, and be sized to provide an equal or greater than flow capacity.

B. CONTRACTOR shall determine the pipe SDR required based on the proposed installation procedures, and the following analysis:
   1. Tensile Pull Load: (Based on pipe weight, pipe friction on the ground, pipe friction in the borehole, flotation loads, and submersion load; tensile load shall be calculated for a minimum of three conditions: When the pipe enters the borehole, midway through insertion, and as the pipe leaves the ream hole.) Limit tensile stress to 1,600 psi.
   2. Bending stress on pipe sidewalls during installation.
   3. Net longitudinal compressive stress, based on bending stresses.
   4. Total longitudinal axial stress from sustained loads.
   5. External differential pressure collapse/buckling resistance.
   6. Earth load on pipe following installation at maximum depth.

C. Summarize results in a tabular format including values used for pipe physical properties.

D. Include sketches to show critical installation dimensions.

E. The SDR used shall be the lower of that specified by ENGINEER in 221113 Water Distribution and Section 221313_Sanitary Sewers or that required by the above analysis.

2.3 UTILITY MARKERS

A. All plastic pipe pumping mains shall have an electronic marker system furnished and installed complete with marker locator.
   1. Markers shall be installed in a horizontal position 3 to 4 feet below the ground surface.
   2. A marker shall be placed over every buried tee, bend, bore pit, or saddle fitting, at intervals no greater than 100 feet along pumping mains and where directed by ENGINEER.
   3. Holes shall be excavated over bored or directionally drilled pumping main for placement of markers

B. Tracer wire is to be installed on all water main distribution lines and service lines.
   1. For directional bores tracer wire shall be:
      a. Stainless steel minimum thickness of 6 gauge and be strung continuously along the pumping main.
      b. Directionally Drilled tracer wire to be Copperhead 'Soloshot' Directional Drill Wire 1150# Break Load or equal.
   2. For conventional open cut construction tracer wire shall be:
      a. Copper wire shall be:
         1) A minimum thickness of 10 gauge and be strung continuously along the pumping main.
         2) #10 AWG high-strength, high density conductor (HS-CCS) insulated with a minimum 30 mil HDPE and rated for direct burial use at minimum 30 volts. Must have 31% conductivity and break load 600# minimum.
         3) Direct bury tracer wire to be Copperhead 10 CCS High Strength 600# Break Load or equal.
   3. Tracer wire shall be installed in a continuous fashion. Install trace wire on top of pressure process piping and secure to main every five (5) feet with tape.
   4. The wire shall be brought to the surface and fastened to all manholes which may serve as access points. Trace wire shall be brought to the surface at least every five hundred (500) feet. Care should be taken not to damage the wire coating. If wire coating is damaged, the CONTRACTOR shall repair the damaged coating with electrical tape.
   5. Tracer wire systems shall terminate in Rhino Triview Tracing wire stations. Terminals shall be external and green for sanitary sewer systems. Terminals should be located at least every one thousand (1,000) feet or as shown on the drawings.
   6. CONTRACTOR shall test the locator system for continuity upon completed installation. Should tracer wires fail to test for continuity then the test shall be considered a failure.
   7. Failure of the tracer wire shall result in the installation of utility markers at no additional cost to OWNER.

C. Warning Tape for metallic and non-metallic piping is listed in Section 312000 Earthmoving.

PART 3 - EXECUTION

3.1 SITE CONDITIONS

A. CONTRACTOR shall examine the site(s) indicated. The limits of surface excavation are shown on Drawings. CONTRACTOR shall be responsible for locating the borehole and receiving hole sufficiently back from the limits of excavation to allow connection to the horizontally drilled pipe.

3.2 PROTECTION

A. Provide all required sediment and erosion control measurements to prevent drilling fluid or borehole cuttings from entering the wetlands areas or surface waters.

3.3 INSTALLATION

A. Pilot hole shall establish the horizontal plane of the pipeline. A plot of length versus elevation versus left/right variance will dictate the actual as-built plan and profile of the pipeline. Data feedback and electronic guidance systems are supplemental surface tracking systems and shall be used to provide confirmation of position.
   1. Minimum depths are indicated on Drawings. Pipe may be installed at greater depths to facilitate the installation if the proposed greater depth is reviewed and approved by ENGINEER before installation.

B. Reaming shall consist of using an appropriate tool to open the pilot hole to a slightly larger diameter than the carrier pipeline. The percentage over size shall depend on soil types, soil stabilities, depth, drilling fluid hydrostatic pressure, etc. Normal over sizing shall be from 120 to 150 percent of the carrier pipe diameter. Drilling fluid shall be forced down the hole to stabilize the hole and to remove soil cuttings.

C. Pull back the entire pipeline length in one segment back through the drilling fluid along the reamed hole pathway. Proper pipe handling, cradling, bending minimization, surface force readings, constant insertion velocity, drilling fluid flow circulation/exit rate, and footage length installed shall be recorded. The pull-back speed shall be within the pipe manufacturer's recommendations.

D. The as-built Drawings are finalized based on the final course followed by the reamer and the installed pipeline. The gravity forces may have caused the reamer to go slightly deeper than the pilot hole and the buoyant pipe may be resting on the crown of the reamed hole.
   1. Any bits, drills, reamers, or other tools lost or stuck in the hole shall be removed at CONTRACTOR's expense. If tools cannot be readily removed, CONTRACTOR may at CONTRACTOR's option abandon the hole. No payment shall be made for any lost equipment, material, or work on abandoned holes.

E. Allowable Tolerances in Pipe Grade: A variation greater than 6 inches from the horizontal plan or designated grade is sufficient reason for rejection of the pipe, and pipe shall be re-bored to proper grade if so directed by ENGINEER at no cost to OWNER.

F. Drilling Fluid: Drilling fluid to be used to facilitate installation of the pipe shall be adjusted within acceptable limits such that ground heaving and subsurface cavity formation through erosion are prevented.

3.4 CLEAN UP AND RESTORATION

A. Spent drilling fluid and cuttings shall be confined to vicinity of drilling rig.
   1. Any drilling fluid which enters the pipe shall be removed by flushing or other suitable means.
   2. CONTRACTOR shall be responsible for clean up and restoration should the borehole blow out due to excessive pressure in the drilling fluid. No additional payment shall be made for clean up costs required by OWNER, ENGINEER, or regulatory agencies due to a loss of drilling fluid. This includes all requirements of the frac-out plan.

B. Restoration: Pits excavated to permit connection of bored pipe shall be backfilled, and disturbed surface shall be restored as described in the City of Brighton Specification.

3.5 FIELD QUALITY CONTROL

A. Pipe Logs: Logs shall be kept giving the horizontal and vertical position of the transmission main or force main at 25-foot intervals along the pipe points to confirm its conformance to specified depth and line and grade shown on Drawings. No payment for any length pipe shall be made without a log accompanying it.

END OF SECTION 02441

SECTION 02445 - CASING PIPE CONSTRUCTION

PART 1 - GENERAL

1.1 SUMMARY

A. Section Includes: Providing casing pipes in the locations shown and according to details shown on Drawings.

B. Products Installed but not Furnished under this Section:
   1. The carrier pipe shall be as specified under:
      1) Section 221113_Water Distribution Piping
      2) Section 221313_Sanitary Sewers
      3) Section 334100_Storm Utility Drainage Piping

1.2 REFERENCES

A. Reference Standards:
   1. AASTHO:
      a. M167 Bituminous Coating.
      b. M190 Bituminous Coating.
   2. American Railway Engineering (AREA):
      a. Part 5, Pipelines.
   3. ASTM:
      a. A 53, Grade B Pipe, Steel, Black and Hot-Dipped, Zinc-Coated Welded and Seamless.
      b. A 106 Seamless Carbon Steel Pipe for High-Temperature Service.
      c. A 153 Zinc Coating (Hot-Dip) on Iron and Steel Hardware.
      d. A 449 Quenched and Tempered Steel Bolts and Studs.
      e. A 569 Steel, Carbon (0.15 Maximum, Percent), Hot-Rolled Sheet and Strip Commercial Quality.
      f. C 76 Reinforced Concrete Culvert, Storm Drain, and Sewer Pipe.
   4. Michigan Department of Transportation:
      a. MDOT 8.08.03 Reinforcing Steel.

1.3 SUBMITTALS

A. Shop Drawings: Submit in accordance with Section 01330_Submittals, Shop Drawings covering the items included under this Section. Shop Drawing submittals shall include:
   1. CONTRACTOR shall submit complete plans and details of the boring installation, including:
      a. Arrangement of cutter head.
      b. Location and size of jacking and receiving pits.
      c. Shoring/Sheeting of jacking and receiving pits.
      d. Method of grouting.

1.4 SCHEDULING

A. CONTRACTOR shall notify **City of Brighton** at least 5 working days before beginning Work under this Section.

B. CONTRACTOR shall notify the **Livingston County Road Commission** 5 days prior to beginning Work under this Section.

1.5 PROJECT CONDITIONS

A. Safety Requirements: All operations shall be conducted so as not to interfere with, interrupt, or endanger the operation of roadways, or damage, destroy, or endanger the integrity of roadway.

B. At all times when Work is being progressed, a field supervisor for Work with no less than 12 months experience in the operation of the equipment being used shall be present. If boring equipment or similar machines are being used, the machine operator also shall have no less than 12 months experience in the operation of the equipment being used.

PART 2 - PRODUCTS

2.1 STEEL PIPE FOR USE UNDER ROADWAYS

A. Pipe shall be ASTM A 53, Type E or S, Grade B, or ASTM A 106, Grade B or C, with a minimum yield strength of 35,000 psi.

B. Steel pipe casing shall be smooth steel pipe fabricated in sections in accordance with AWWA C201. Lengths shall be as long as practical for site conditions.

C. Joints shall conform to the requirements of AWWA C206. Joints between sections shall be completely welded to the preceding sections. Prior to welding joints the Contractor shall ensure that both ends of the casing sections being welded are square.

D. The ends of the steel pipe to be jacked shall be prepared for field welding at joints.

E. The nominal outside diameter and wall thickness, in inches, for steel pipe shall be as shown below.

Nominal Size	Wall Thickness
12	0.188
14	0.25D0
16	0.250
18	0.250
20	0.250
24	0.250
30	0.312
36	0.312
42	0.438
48	0.500
54	0.563

2.2 CONCRETE PIPE

A. Concrete jacking pipe shall be reinforced concrete pipe meeting the requirements of AASHTO M 170M, Class IV pipe, as specified in MDOT Standard Specifications 909.04.

B. Joints in reinforced concrete pipe used for jacking shall be tongue and groove, jointed with cold mastic and inside tuck-pointing.

C. A cushioning material, similar to celotex or hardboard, shall be placed in the joint shoulder between pipe sections to distribute uniformly the jacking pressures.

D. After the jacking operation is complete, the joints in pipe 36 inches and larger shall be pointed on the inside by removing any existing materials to a depth of 1/2-inch and cementing this space by pointing with cement mortar composed of 1 part cement and 2 parts sand.

2.3 CARRIER PIPE SUPPORT

A. Provide steel assemblies fabricated of steel beams, angles, and small-diameter pipe to guide and support large carrier pipe at required grade.

B. Provide casing pipe spacers equivalent to INs manufactured by or approved equal.

PART 3 - EXECUTION

3.1 PREPARATION

A. CONTRACTOR shall excavate and dispose of material of any nature required to carry out Work. All tunnel and shaft excavation shall be performed in accordance with any paragraphs under Division 2 which may apply. All excavated material, except that needed for backfill, shall be promptly removed and disposed of.

B. Drainage: CONTRACTOR shall provide and maintain all facilities for collecting, conveying, and disposing of water in tunnels and shafts until the completion of Work as required in Section 312319 Dewatering. CONTRACTOR shall have on hand at all times sufficient machinery for all emergencies that are likely to arise on Work of this character, and such machinery shall be kept in good working order. The pumping and power supply to the pumps shall be under the direct charge of competent mechanics, constantly attended on a 24-hour basis.

C. Effective and continuous control of water during the placing of concrete shall be required. CONTRACTOR shall maintain the groundwater table to a level 2 feet below the casing invert during construction.

D. Protection of Drainage Facilities: If, in the course of construction, it may be necessary to block a ditch, pipe or other drainage facility, temporary pipes, ditches or other drainage facilities shall be installed to maintain adequate drainage, as approved by the owner of the facility being crossed. Upon completion of Work, the temporary facilities shall be removed and the permanent facilities restored.

E. Power and Lighting: All power machinery and tools used shall be operated by electricity or compressed air. No electric voltage in excess of 440 volts will be permitted. Transformers, if used, shall be mounted on platforms or in an approved enclosure. The use of gasoline in power is prohibited.
   1. All machinery and equipment used in tunnel headings or shafts under gaseous conditions shall bear the approval plate of the United States Bureau of Mines.
   2. Work shall be lighted with electricity at the expense of CONTRACTOR. A sufficient number of lights shall be provided to illuminate properly all parts of Work. All lighting circuits shall be thoroughly insulated and kept separate from power circuits. In gaseous conditions, all lamps shall be mounted in protected gas-and-vapor-proof fixtures.

3.2 INSTALLATION

A. Casing pipe is to extend a minimum of 10 feet from the back of curb when jacking under roadways.

B. Ventilation: CONTRACTOR shall keep the tunnel air in a condition suitable for the health of the workers and clear enough for the surveying operations. Provisions shall be made for quick removal of gases. Whenever a 24-hour tunneling operation exists, CONTRACTOR shall have attainable, within 1 hour's time, any spare piece of equipment or material vital to the tunnel operation.

C. Jacking and Boring Pipe: Jacking and receiving pits shall be completely sheeted to provide proper support for the banks and adequate support for reaction blocks. Jacking shaft shall be constructed long enough to provide room for jacking head frame, reaction blocks and two sections of pipe. The width shall be sufficient to allow ample working room. The backstops or reaction blocks shall be placed absolutely perpendicular in all directions to axis of the pipe and the guide timbers carefully installed to the proper line and grade.
   1. Prior to jacking the pipe out of the shaft, the outside surface may be coated with bentonite or other suitable lubricant. Bentonite, or other suitable lubricant, may be applied at the front face of the lead pipe simultaneously with the jacking operation. A lubricant sill plank may be required in the heading to maintain vertical alignment.
   2. The front of the pipe shall be provided with mechanical arrangements or devices that will positively prevent the auger from leading the pipe so that there will be no unsupported excavation ahead of the pipe.
   3. The auger and cutting head arrangement shall be removable from within the pipe in the event an obstruction is encountered. If the obstruction cannot be removed without excavation in advance of the pipe, the casing pipe shall be filled with grout and abandoned unless otherwise directed by ENGINEER.
   4. Jacking pressure must be applied by a pushing frame at right angles to the line to avoid breaking the pipe or forcing it out of alignment. A positive stop boring arrangement to prevent excavation ahead of the pipe shall be provided. Excavation ahead of the pipe shall not be permitted.
   5. When excavating, voids outside the pipe and disturbances of the surrounding material shall not exceed 1/2 inch. Excessive voids shall be filled immediately with sand or other suitable material and thoroughly compacted.
   6. The jacking operating shall be continuous insofar as possible to prevent seizure of the pipe. However, if the operation is discontinued for any time, the excavation shall be safely supported with wood bulkhead and adequate blocking.

D. Grouting Casing Pipe: All voids around the outside of the jacked pipe shall be filled by means of pressure grouting with approved material as specified in MDOT Standard Specification 702. Grouting shall be completed within 48 hours of completing the bore.
   1. A sufficient number of grout holes shall be provided in the casing pipe to ensure complete grouting of the space between the casing and the surrounding soil. Grouting pressure shall be sufficiently high to fill all voids.
   2. Following satisfactory pipe grouting operations, the grout pipe shall be removed from the grout hole after the grout has taken its initial set. The space occupied by the grout pipe shall be completely filled with stiff mortar and troweled smooth at the inner face or a threaded plug installed.

E. Grouting Tunnel under Plates: Grouting shall start at the lowest hole in each grout panel and proceed upwards simultaneously on both sides. A threaded plug shall be installed in each grout hole as the grouting is completed at that hole. Grouting shall be kept as close to the headings as possible, using grout stops behind the liner plates as necessary. Grouting shall proceed as directed by ENGINEER, but in no event shall more than six lineal feet of tunnel be progressed beyond the grouting.
   1. Grouting pressure shall be sufficiently high to fill all voids. Necessary grouting holes shall be installed as required to ensure complete filling of void spaces. A grout pipe with a control valve attached to the grout hole shall be inserted and securely caulked to the grout hole with a half coupling welded to the casing pipe. Grout shall consist of a mixture of Portland cement thoroughly mixed with mortar sand, with sufficient water to permit steady flow through the grout pipes. The mix shall be 2 parts of sand to 1 part of cement. If necessary to speed up setting of grout, approved admixtures of quick-setting cement shall be used as directed by ENGINEER.
   2. Following satisfactory pipe grouting operations, the grout pipe shall be removed from the grout hole after the grout has taken its initial set. The space occupied by the grout pipe shall be pitted with a threaded plug.

3.3 CARRIER PIPE INSTALLATION

A. Carrier pipes shall be installed as specified under:
   1) Section 221113_Water Distribution Piping
   2) Section 221313_Sanitary Sewers
   3) Section 334100_Storm Utility Drainage Piping

B. Pipe shall be the type and class as shown on Drawings. Joint restraint, where required, shall be provided.

C. Pipe Placed in Casings: Under this Section, CONTRACTOR shall place the carrier pipe, fill the annular space between the casing and carrier pipe with sand or pea stone, place bulkheads, and complete all backfilling. All necessary skidding materials required to protect the carrier pipe shall be provided.

D. Carrier Pipe Support: Place pipe spacers, wood skids, or steel frames so as to prevent contact between carrier and casing pipe and to guide carrier pipe without damage into the casing pipe to its required grade. Place pipe spacers or wood skids within 12 inches of casing pipe ends, at each carrier pipe joint, and at intervals to prevent pipe deflection. Maximum distance between supports shall be 7 feet. If grout is to be used to fill annular space between carrier and casing pipes, place support at top of carrier pipe to prevent flotation.

E. Casing Pipe under State (MDOT) or County Roads: All void spaces between the casing pipe and carrier pipe shall be filled with sand meeting the requirements of MDOT Standard Specifications for natural sand 2NS. The sand shall be placed by flushing or other methods approved by ENGINEER. CONTRACTOR shall furnish sand fill holes in the carrier pipe as required to ensure complete filling of all void spaces.

F. Sealing Casing Pipe Ends:

1. Casing ends seals shall be synthetic neoprene rubber pull-on type end seals with stainless steel bands, as manufactured by Pipeline Seal and Insulator, Inc., or approved equal.
2. The annular space at ends of casing pipe shall be bulkheaded with a minimum 12-inch-thick solid masonry with a 1-inch fiberboard cushion between the masonry and carrier pipe.

3.4 FIELD QUALITY CONTROL

A. CONTRACTOR shall provide all survey equipment and personnel necessary to maintain the casing or tunnel on correct alignment and grade during construction. ENGINEER shall provide reference points for use by CONTRACTOR.

END OF SECTION 02445

SECTION 033053 - MISCELLANEOUS CAST-IN-PLACE CONCRETE

PART 1 - GENERAL

1.1 SUMMARY

A. Section includes cast-in-place concrete, including reinforcement, concrete materials, mixture design, placement procedures, and finishes.

B. Related Requirements:
1. Section 321313 "Concrete Paving" for concrete pavement and walks.

1.2 ACTION SUBMITTALS

A. Product Data: For each type of product.

B. Design Mixtures: For each concrete mixture.

1.3 QUALITY ASSURANCE

A. Ready-Mix-Concrete Manufacturer Qualifications: A firm experienced in manufacturing ready-mixed concrete products and that complies with ASTM C 94/C 94M requirements for production facilities and equipment.

PART 2 - PRODUCTS

2.1 CONCRETE, GENERAL

A. Comply with the following sections of ACI 301 unless modified by requirements in the Contract Documents:
1. "General Requirements."
2. "Formwork and Formwork Accessories."
3. "Reinforcement and Reinforcement Supports."
4. "Concrete Mixtures."
5. "Handling, Placing, and Constructing."
6. "Lightweight Concrete."

B. Comply with ACI 117.

2.2 STEEL REINFORCEMENT

A. Reinforcing Bars: ASTM A 615/A 615M, Grade 60, deformed.

B. Plain-Steel Wire: ASTM A 1064/A 1064M, as drawn.

C. Plain-Steel Welded-Wire Reinforcement: ASTM A 1064/A 1064M, plain, fabricated from as-drawn steel wire into flat sheets.

D. Deformed-Steel Welded-Wire Reinforcement: ASTM A 1064/A 1064M, flat sheet.

2.3 CONCRETE MATERIALS

A. Normal-Weight Aggregate: ASTM C 33/C 33M, 1-1/2-inch nominal maximum aggregate size.

B. Lightweight Aggregate: ASTM C 330/C 330M, 1-inch nominal maximum aggregate size.

C. Air-Entraining Admixture: ASTM C 260/C 260M.

D. Chemical Admixtures: Certified by manufacturer to be compatible with other admixtures and that do not contribute water-soluble chloride ions exceeding those permitted in hardened concrete. Do not use calcium chloride or admixtures containing calcium chloride.
   1. Water-Reducing Admixture: ASTM C 494/C 494M, Type A.
   2. Retarding Admixture: ASTM C 494/C 494M, Type B.
   3. Water-Reducing and Retarding Admixture: ASTM C 494/C 494M, Type D.
   4. High-Range, Water-Reducing Admixture: ASTM C 494/C 494M, Type F.
   5. High-Range, Water-Reducing and Retarding Admixture: ASTM C 494/C 494M, Type G.
   6. Plasticizing and Retarding Admixture: ASTM C 1017/C 1017M, Type II.

E. Water: ASTM C 94/C 94M.

2.4 FIBER REINFORCEMENT

A. Synthetic Micro-Fiber: Monofilament or fibrillated polypropylene micro-fibers engineered and designed for use in concrete, complying with ASTM C 1116/C 1116M, Type III, 1/2 to 1-1/2 inches long.

2.5 RELATED MATERIALS

A. Vapor Retarder: Plastic sheet, ASTM E 1745, Class A or B.

B. Joint-Filler Strips: ASTM D 1751, asphalt-saturated cellulosic fiber, or ASTM D 1752, cork or self-expanding cork.

2.6 CURING MATERIALS

A. Evaporation Retarder: Waterborne, monomolecular film forming; manufactured for application to fresh concrete.

B. Absorptive Cover: AASHTO M 182, Class 3, burlap cloth or cotton mats.

C. Moisture-Retaining Cover: ASTM C 171, polyethylene film or white burlap-polyethylene sheet.

D. Water: Potable.

E. Clear, Waterborne, Membrane-Forming Curing Compound: ASTM C 309, Type 1, Class B.

2.7 CONCRETE MIXTURES

A. Comply with ACI 301.

B. Normal-Weight Concrete:
   1. Minimum Compressive Strength: 4000 psi at 28 days.
   2. Maximum W/C Ratio: 0.45.
   3. Slump Limit: 5 inches, for concrete with verified slump of 2 to 4 inches before adding high-range water-reducing admixture or plasticizing admixture 8-inches, plus or minus 1 inch.
   4. Air Content: Maintain within range permitted by ACI 301. Do not allow air content of trowel-finished floor slabs to exceed 3 percent.

C. Synthetic Fiber: Uniformly disperse in concrete mix at manufacturer's recommended rate, but not less than a rate of 1.0 lb/cu. yd..

2.8 CONCRETE MIXING

A. Ready-Mixed Concrete: Measure, batch, mix, and deliver concrete according to ASTM C 94/C 94M, and furnish batch ticket information.
   1. When air temperature is above 90 deg F, reduce mixing and delivery time to 60 minutes.

PART 3 - EXECUTION

3.1 FORMWORK INSTALLATION

A. Design, construct, erect, brace, and maintain formwork according to ACI 301.

3.2 EMBEDDED ITEM INSTALLATION

A. Place and secure anchorage devices and other embedded items required for adjoining work that is attached to or supported by cast-in-place concrete. Use setting drawings, templates, diagrams, instructions, and directions furnished with items to be embedded.

3.3 STEEL REINFORCEMENT INSTALLATION

A. Comply with CRSI's "Manual of Standard Practice" for fabricating, placing, and supporting reinforcement.

3.4 JOINTS

A. General: Construct joints true to line with faces perpendicular to surface plane of concrete.

B. Construction Joints: Install so strength and appearance of concrete are not impaired, at locations indicated or as approved by Architect.

C. Contraction Joints in Slabs-on-Grade: Form weakened-plane contraction joints, sectioning concrete into areas as indicated. Construct contraction joints for a depth equal to at least one-fourth of concrete thickness, as follows:

1. Grooved Joints: Form contraction joints after initial floating by grooving and finishing each edge of joint to a radius of 1/8 inch. Repeat grooving of contraction joints after applying surface finishes. Eliminate groover marks on concrete surfaces.
2. Sawed Joints: Form contraction joints with power saws equipped with shatterproof abrasive or diamond-rimmed blades. Cut 1/8-inch- wide joints into concrete when cutting action does not tear, abrade, or otherwise damage surface and before concrete develops random contraction cracks.

D. Isolation Joints in Slabs-on-Grade: After removing formwork, install joint-filler strips at slab junctions with vertical surfaces, such as column pedestals, foundation walls, grade beams, and other locations, as indicated.
1. Extend joint-filler strips full width and depth of joint, terminating flush with finished concrete surface unless otherwise indicated.

3.5 CONCRETE PLACEMENT

A. Comply with ACI 301 for placing concrete.

B. Before test sampling and placing concrete, water may be added at Project site, subject to limitations of ACI 301.

C. Do not add water to concrete during delivery, at Project site, or during placement.

D. Consolidate concrete with mechanical vibrating equipment according to ACI 301.

3.6 FINISHING FORMED SURFACES

A. Rough-Formed Finish: As-cast concrete texture imparted by form-facing material with tie holes and defects repaired and patched. Remove fins and other projections exceeding 1/2 inch.

B. Smooth-Formed Finish: As-cast concrete texture imparted by form-facing material, arranged in an orderly and symmetrical manner with a minimum of seams. Repair and patch tie holes and defective areas. Remove fins and other projections exceeding 1/8 inch.

3.7 FINISHING UNFORMED SURFACES

A. General: Comply with ACI 302.1R for screeding, restraightening, and finishing operations for concrete surfaces. Do not wet concrete surfaces.

B. Screed surfaces with a straightedge and strike off. Begin initial floating using bull floats or darbies to form a uniform and open-textured surface plane before excess moisture or bleedwater appears on surface.
1. Do not further disturb surfaces before starting finishing operations.

C. Trowel and Fine-Broom Finish: Apply a partial trowel finish, stopping after second troweling, to surfaces indicated and to surfaces where ceramic or quarry tile is to be installed by either thickset or thinset methods. Immediately after second troweling, and when concrete is still plastic, slightly scarify surface with a fine broom.

D. Slip-Resistive Broom Finish: Apply a slip-resistive finish to surfaces indicated and to exterior concrete platforms, steps, and ramps. Immediately after float finishing, slightly roughen trafficked surface by brooming with fiber-bristle broom perpendicular to main traffic route.

3.8 CONCRETE PROTECTING AND CURING

A. General: Protect freshly placed concrete from premature drying and excessive cold or hot temperatures. Comply with ACI 306.1 for cold-weather protection and with ACI 301 for hot-weather protection during curing.

B. Evaporation Retarder: Apply evaporation retarder to concrete surfaces if hot, dry, or windy conditions cause moisture loss approaching 0.2 lb/sq. ft. x h before and during finishing operations. Apply according to manufacturer's written instructions after placing, screening, and bull floating or darbying concrete, but before float finishing.

C. Begin curing after finishing concrete but not before free water has disappeared from concrete surface.

D. Curing Methods: Cure formed and unformed concrete for at least seven days by one or a combination of the following methods:
   1. Moisture Curing: Keep surfaces continuously moist for not less than seven days with the following materials:

      a. Water.
      b. Continuous water-fog spray.
      c. Absorptive cover, water saturated, and kept continuously wet. Cover concrete surfaces and edges with 12-inch lap over adjacent absorptive covers.
   2. Moisture-Retaining-Cover Curing: Cover concrete surfaces with moisture-retaining cover for curing concrete, placed in widest practicable width, with sides and ends lapped at least 12 inches, and sealed by waterproof tape or adhesive. Cure for not less than seven days. Immediately repair any holes or tears during curing period, using cover material and waterproof tape.
   3. Curing Compound: Apply uniformly in continuous operation by power spray or roller according to manufacturer's written instructions. Recoat areas subjected to heavy rainfall within three hours after initial application. Maintain continuity of coating and repair damage during curing period.

3.9 FIELD QUALITY CONTROL

A. Testing Agency: Owner will engage a qualified testing agency to perform tests and inspections.

B. Tests: Perform according to ACI 301.
   1. Testing Frequency: Obtain one composite sample for each day's pour of each concrete mixture exceeding 5 cu. yd., but less than 25 cu. yd., plus one set for each additional 50 cu. yd. or fraction thereof.

END OF SECTION 033053

SECTION 221113 - WATER DISTRIBUTION PIPING

PART 1 - GENERAL

1.1 SUMMARY

A. This Section includes water-distribution piping and related components outside the building for combined water service and fire-service mains.

B. Section includes the following:
1. Provide all labor, materials, and equipment necessary for fabrication and production of the items specified in this Section and as shown on Drawings or listed on Schedule.
2. Dismantling of existing piping and supports, where required or shown or noted on Drawings; piping connections to existing piping, structures, valves, gates, measuring devices, pumps and other equipment, including equipment erected under other Contracts, are included in Work of this Section. Piping shall contain necessary unions or companion flanges to allow ease of equipment removal.
3. Complete all the demolition work and repair thereof to existing walls and slabs as required for the installation of this Work including grouting of all sleeves and castings. Provide all necessary joint and coupling materials, including bolts, nuts and gaskets, wall castings or sleeves, and standard or special fittings. Furnish hangers, supports, anchors, blocking, harnesses, and other necessary closure pipe sections and special fittings. Provide and secure in proper alignment, all sleeve and casting openings in existing walls and slabs, including repair thereof.
4. Provide all shop-applied interior and exterior pipe linings and coatings. Provide plugs in open ends of pipe, temporary bulkheads, protection of surface and subsurface improvements, cleaning, painting, testing, and disinfection, as required to accomplish Work as specified and shown on Drawings.

1.2 DEFINITIONS

A. DIP: Ductile Iron Pipe

B. HDPE: High Density Polyethylene Pipe

C. PE: Polyethylene plastic.

D. PVC: Polyvinyl chloride plastic.

1.3 REFERENCE STANDARDS

A. Where noted in these specifications, all referenced standards refer to the latest revisions to the following specifications.
1. AWWA meaning the American Waterworks Association.
2. ASTM meaning the American Society for Testing and Materials.
3. ANSI meaning the American National Standards Institute.
4. UNI - BELL meaning the Uni-Bell PVC Pipe Association.

5. Recommended Standards for Water Works (Ten States Standard) Great Lakes - Upper Mississippi River Board of State and Provincial Public Health and Environmental Managers.
6. PPI meaning the Plastic Pipe Institute, Inc.
7. NSF meaning the National Sanitation Foundation

1.4 ACTION SUBMITTALS

A. Product Data: For each type of product indicated.

B. Shop Drawings: Submit in accordance with Section 013300_Submittal Procedures covering the items included under this Section. Shop Drawing submittals shall include:
1. Shop Drawings shall be fully dimensioned Drawings showing the piping in full detail with exact locations, dimensions, and schedules of all pipe, fittings, hangers, supports, and appurtenances. They shall be made in accordance with the general information shown on Drawing and special information furnished by the several manufacturers of equipment. Where special fittings are required, they shall be shown in large detail with all necessary dimensions.
2. Design details of joints and joint restraint shall be submitted to ENGINEER for ENGINEER's consideration and approval before ordering any pipe.

C. Record Drawings: At Project closeout, submit record Drawings of installed products, in accordance with requirements of City of Brighton Standards.

1.5 INFORMATIONAL SUBMITTALS

A. Field quality-control test reports.

1.6 CLOSEOUT SUBMITTALS

A. Operation and Maintenance Data: For water valves and specialties to include in emergency, operation, and maintenance manuals.

1.7 QUALITY ASSURANCE

A. Regulatory Requirements:
1. Comply with standards requirements of City of Brighton for potable-water-service piping, including materials, installation, testing, and disinfection.
2. Comply with standards requirements of City of Brighton for fire-suppression water-service piping, including materials, hose threads, installation, and testing.
3. Comply with the Recommended Standards for Water Works (Ten States Standard) Great Lakes - Upper Mississippi River Board of State and Provincial Public Health and Environmental Managers.

B. Piping materials shall bear label, stamp, or other markings of specified testing agency.

C. Comply with FMG's "Approval Guide" or UL's "Fire Protection Equipment Directory" for fire-service-main products.

D. NFPA Compliance: Comply with NFPA 24 for materials, installations, tests, flushing, and valve and hydrant supervision for fire-service-main piping for fire suppression.

E. NSF Compliance:
   1. DIP shall comply with NSF Standard 61 Annex G for materials for water-service piping and specialties for domestic water.
   2. PVC shall comply with NSF Standard 14 for water-service piping and specialties for domestic water.

F. All Work under this Section shall be done in accordance with standard practices as recommended by manufacturer and AWWA.

G. Codes, Ordinances, and Standards: Manufacture, storage, and erection of equipment under this Contract shall be in accordance with current ASA (ANSI), AWWA, and ASTM Standards. Standards and Specifications referenced herein shall be the current published edition. The manufacturer of the pipe and fittings shall furnish ENGINEER a certified statement that all pipe and fittings furnished by manufacturer meet the material requirements and have been inspected and tested in accordance with the applicable Specification and Standard.

1.8 DELIVERY, STORAGE, AND HANDLING

A. Preparation for Transport: Prepare valves, including fire hydrants, according to the following:
   1. Ensure that valves are dry and internally protected against rust and corrosion.
   2. Protect valves against damage to threaded ends and flange faces.
   3. Set valves in best position for handling. Set valves closed to prevent rattling.

B. During Storage: Use precautions for valves, including fire hydrants, according to the following:
   1. Do not remove end protectors unless necessary for inspection; then reinstall for storage.
   2. Protect from weather. Store indoors and maintain temperature higher than ambient dew-point temperature. Support off the ground or pavement in watertight enclosures when outdoor storage is necessary.

C. Handling: Use sling to handle valves and fire hydrants if size requires handling by crane or lift. Rig valves to avoid damage to exposed parts. Do not use handwheels or stems as lifting or rigging points.

D. Deliver piping with factory-applied end caps. Maintain end caps through shipping, storage, and handling to prevent pipe-end damage and to prevent entrance of dirt, debris, and moisture.

E. Protect stored piping from moisture and dirt. Elevate above grade. Do not exceed structural capacity of floor when storing inside.

F. Protect flanges, fittings, and specialties from moisture and dirt.

G. Store plastic piping protected from direct sunlight. Support to prevent sagging and bending.

H. Disinfection compounds shall be stored in well-ventilated areas protected from moisture and fire.

1.9 PROJECT CONDITIONS

A. Interruption of Existing Water-Distribution Service: Do not interrupt service to facilities occupied by the City of Brighton or Others unless permitted under the following conditions and then only after arranging to provide temporary water-distribution service according to requirements indicated:
   1. Notify City of Brighton Utility Director no fewer than two days in advance of proposed interruption of service.

B. Existing Conditions: The Drawings are not intended to show every detail of construction or location of piping or equipment. Where existing conditions make it necessary or advisable to change location of piping or equipment, CONTRACTOR shall so inform ENGINEER for ENGINEER's approval.

PART 2 - PRODUCTS

2.1 COPPER TUBE AND FITTINGS

A. Soft Copper Tube: ASTM B 88, Type K, water tube, annealed temper.
   1. Copper, Solder-Joint Fittings: ASME B16.18, cast-copper-alloy or ASME B16.22, wrought-copper, solder-joint pressure type. Furnish only wrought-copper fittings if indicated.
   2. Copper, Pressure-Seal Fittings:
      a. NPS 2 and Smaller: Wrought-copper fitting with EPDM O-ring seal in each end.
      b. NPS 2-1/2 to NPS 4: Bronze fitting with stainless-steel grip ring and EPDM O-ring seal in each end.

B. Bronze Flanges: ASME B16.24, Class 150, with solder-joint end. Furnish Class 300 flanges if required to match piping.

C. Copper Unions: MSS SP-123, cast-copper-alloy, hexagonal-stock body with ball-and-socket, metal-to-metal seating surfaces, and solder-joint or threaded ends.

2.2 DUCTILE-IRON PIPE AND FITTINGS

A. All ductile iron water main pipe shall conform to ANSI/AWWA C151/A21.51-02 and contain a cement mortar lining which shall conform to ANSI/AWWA C104/A21.4-95. All ductile iron watermain pipe with a nominal inside diameter of sixteen inches (16”) or smaller shall be Pressure Class 350.

B. Fittings; All bends, tees, wyes and other special fittings used on water main pipe shall be ductile iron Pressure Class 350 which shall conform to ANSI/AWWA C153/A21.53-00 and contain a cement mortar lining which shall conform to ANSI/AWWA C104/A21.4-95. All ductile ironwatermain pipe fitting joints shall be the push-on type and shall conform to ANSI/AWWA C111/A21.11-00.

C. Mechanical-Joint, Ductile-Iron Pipe: with mechanical-joint bell and plain spigot end unless grooved or flanged ends are indicated.

1. Mechanical-Joint, Ductile-Iron Fittings: AWWA C110, ductile- or gray-iron standard pattern or AWWA C153, ductile-iron compact pattern.
    a. Approved Products: EBAA Iron Megalugs Series or Blockbuster 1400 Series," as manufactured by Uni-Flange (Ford Meter Box Co.) or equal
2. Glands, Gaskets, and Bolts: AWWA C111, ductile- or gray-iron glands, rubber gaskets, and steel bolts.
3. Flanged joints shall not be used on ground-buried pipe.

D. Push-on-Joint, Ductile-Iron Pipe: with push-on-joint bell and plain spigot end unless grooved or flanged ends are indicated.
1. Push-on-Joint, Ductile-Iron Fittings: AWWA C110, ductile- or gray-iron standard pattern or AWWA C153, ductile-iron compact pattern.
    a. Approved Products: American Lok-Ring, Americal Flex-ring, American Fast-Grip Gaskets, U.S. Pipe TR Flex, U.S. Pipe Field Lok, U.S. Pipe Field Lok Gasket or equal.
2. Gaskets: ANSI/AWWA C111/A21.11-00, rubber.
3. Flanged joints shall not be used on ground-buried pipe.

E. Flanges: ASME 16.1, Class 125, cast iron.

F. Fasteners: Type 316 stainless steel.

G. All ductile iron piping shall comply with the requirements NSF Standard 61.

2.3 PVC PIPE AND FITTINGS

A. Pipe Sizes 12-inches or Less in diameter: PVC, AWWA Pipe: AWWA C909 and shall meeting the requirements of ASTM-2241-00 and ASTM D1784-03, minimum working Pressure Class 235 (DR 18), with bell end with gasket, and with spigot end.

B. Pipe Sizes 14-inches through 48-inches in diameter; PVC, AWWA Pipe: AWWA C905 and shall meeting the requirements of ASTM-12454 and ASTM D1784-03, Pressure Class 235 (DR 18) with bell end with gasket, and with spigot end. Wall thickness in the bell section shall conform to the requirements of ASTM D3139, “Standard Specification for Joint for Plastic Pressure Pipes Using Flexible Elastomeric Seals.”

C. General;
1. Comply with NSF Standard 14. ANSI/NSF Standard 14 meets the requirements of ANSI/NSF Standard 61.
2. Pipe shall have an integral wall-thickened bell end designed for joint assembly using a factory installed elastomeric gasket conforming to ASTM F477 to affect the pressure seal.
3. Pipe shall be designed for direct connection into ductile iron pipe and fittings.
4. Each piece of pipe and fitting shall be clearly labeled to identify its size, pressure class and manufacture date.
5. Pipe joints shall meet the requirements of ASTM D-3212-9 for push-on joints.
6. Gaskets shall meet the requirements of ASTM F-77-02 regarding elastomeric seals for joining plastic pipe.

7. PVC pipe shall have the same outside diameter as ductile iron water main pipe. The internal diameters of the proposed PVC pipe shall be equivalent to the comparable ductile iron internal diameters.
8. All bends, wyes and other fittings for PVC water main pipe shall be ductile iron.
9. Push-on-Joint, Ductile-Iron Fittings: AWWA C110, ductile- or gray-iron standard pattern or AWWA C153, ductile-iron compact pattern.
   a. Gaskets: AWWA C111, rubber.
   b. Approved Manufacturer: Bell-Tite, Ring-Tite, Tyton, Fastite or equal
10. PVC pipe shall be provided in standard 20 foot lengths, unless otherwise specified, detailed or required on the approved construction plans. Shorter lengths up to 10 feet, will be permitted when authorized by the City. Field cut lengths of pipe used as closures may not be shorter than 2 feet in length and must be approved by the City.
11. All PVC pipe entering or exiting a fitting shall be a minimum length of 10 feet.

D. Solid Sleeves; Contractor shall provide bolted solid sleeves manufactured of ductile iron with a restraint designed for PVC water main pipe. The nuts and bolts for the solid sleeves shall be low carbon steel and conform to ASTM A307, Grade B.

E. Joint Restraint; Megalugs as manufactured by EBAA.

2.4 HDPE PIPE AND FITTINGS

A. High density polyethylene pipe conforming to ASTM D1598 and D3350, AWWA C906 and ANSI/NSF-14 and 61, material shall be comprised of PE 3408 Resin with a cell classification of PE334434C.
   1. Pipe shall have a wall thickness of DR-11 and a working pressure rating of 160 psi.
   2. Materials and workmanship shall be as required by AWWA M55, PE Pipe Design and Installation Manual and ASTM F714 Manufacturing requirements.
   3. HDPE pipe , appurtenances, and installation methods shall conform to the latest addition of AWWA C906. The AWWA Standard Code C906 identification must appear on the exterior wall print line of the HDPE pipe proposed for potable use and installation. All DDPE materials must be listed and approved for use with potable water under ANSI/NSF Standard 14. ANSI/NSF Standard 14 meets the requirements of ANSI/NSD Standard 61. The exterior wall print lines of all HDPE pipe proposed for installation and potable use must bear the NSF-pw identification.
   4. Pipe shall be furnished in Ductile Iron pipe sizes.
   5. Pipe shall be handled and installed in accordance with manufacturer's recommendations.
   6. Pipe shall be furnished with continuous, permanent print line identifying pipe size, pressure rating, trade name, material classification, ASTM and NSF standards, pipe test category, plant location and shift, date of manufacture, operator and extruder numbers, and supplier of raw materials.
   7. Exterior wall print line must bear NSF – PW identification.
   8. No installations shall exceed ten feet (10') of cover unless approved by the Engineer or as directed by the plans and specifications. The City Engineer must approve the use of HDPE pipe in any water main project within the City.

B. Fittings and Couplings; Fittings and specials shall be of the same construction and design as the pipe. The manufacturer of the pipe shall be the same as the manufacturer of the fittings and other fabrications.

C. Joints; Joints shall be thermally butt-fused according to the recommendations of the manufacturer.

2.5 JOINING MATERIALS

A. Refer to Section 330500 "Common Work Results for Utilities" for commonly used joining materials.

B. Mechanical Joint Restraints; Shall be provided at all valves, reducer fittings and as noted on the Standard Water Main Details and Notes sheets. Restrainers must accommodate the full working pressure ratings and associated safety factor of the specified class of pipe and must be UL or FM approved. Mechanical joint restraints shall meet and or exceed the specification requirements of the pipe material specifications as previously stated. The joint restraints shall be Megalug Series 1100 for Ductile Iron or Pipe Blockbuster 1400 Series," as manufactured by Uni-Flange (Ford Meter Box Co.) or equal. For C900, C905 , C909 or IPS OD PVC pipe, Series 2000PV Megalug Mechanical Joint Restraints or approved equal as manufactured by EBAA Iron, Inc. is to be provided. In addition to certification, a copy of manufacturer's recommendations for installation must be supplied to the City Engineer. Restrained mechanical joints shall be provided at all main line valves, all hydrant branch pipe joints and / or as called out in the construction plans.

C. HDPE Restraint Methods;
   1. Restrained joints include butt fusions, electro-fusions, socket fusions, bolted flange connections, MJ Adapter connections or other restrained mechanical connections.
   2. Provide joint restraints on long string of butt fused HDPE to bell and spigot or mechanical sleeve joint.
      a. Wall Anchor;
         1) Restrain the transition connection by butt fusing a Wall Anchor in the HDPE pipeline close to the connection and pouring a concrete anchor around it as shown in Details. Refer to the pipe manufacturer’s recommendations on anchor size and pull out loads.
      b. Mechanical Joint.
         1) Restrain the transition connection and several non-PE bell and spigot joints down line from the transition connection.
         2) Distance of pipe restraint needs to be identified on the drawings and noted in the HDPE to DIP Connection Detail. At minimum the Contractor shall provide pipe restraint per the requirements of a “Dead End” pipe as noted in the “Pipe Restraint Schedule” or 3 Pipe Lengths, whichever is greater.

D. HDPE to DIP and DIP Fittings;
   1. MJ (mechanical joint) Adapters are to be used to connect polyethylene pipe to mechanical joint fittings and appurtenances that meet AWWA C111/ANSI A21.11.

2. Slip the Gland Ring over the pipe end and then butt fuse the HDPE MJ Adapter to the end of the pipe using the PPI Generic Butt Fusion Joining Procedure TR-33. Install the Gasket over the MJ Adapter and align the fitting with the socket hub of the ductile iron fitting. Lubricate the gasket, the end of the MJ adapter, and the inside of the socket hub with an approved pipe lubricant meeting AWWA C111. Do not use soapy water.
3. Insert the MJ Adapter into the socket hub. Make sure it is evenly and completely seated in the socket hub. The MJ Adapter and the socket hub must be aligned straight into each other. Insert the gland bolts, and run the nuts up finger-tight. Tighten the gland bolts evenly to the fitting manufacturer's recommended procedures.
4. When connecting to a valve with an MJ connection, longer T-Bolts may be required. If the T-Bolts that come with the kit are not long enough for the assembly, use a coupling nut and Grade 5 all thread to make up the length required.

E. HDPE Flanged Connection to DI Fittings;
1. Flanged joints can be used to attach HDPE pipe to valves or DI fittings using HDPE Flange Adapter, Back-Up Ring, Gaskets and Bolts, Nuts and Washers.
2. Connection is made by sliding the Back-Up Ring over the pipe end and then butt fusing the HDPE Flange Adapter to the end of the pipe using the PPI Generic Butt Fusion Joining Procedure TR-33. Align the flanges and back-up rings and follow the fitting manufacturer's recommended procedures for bolting the flanges together. The service pressure rating for the back-up ring should meet or exceed the service pressure in the pipe.
3. Gaskets are required for connections between polyethylene and non-polyethylene flanges. The gasket manufacturer should recommend the gasket to use with polyethylene pipe. This is considered a "fully restrained joint" and typically does not need external restraint devices.

F. Solid DI Sleeve Connections to HDPE pipe;
1. Solid Sleeves are ductile iron fittings designed to connect DI / PVC pipe to other piping materials including HDPE pipe. The solid sleeves is to have a flange or MJ hub to attach to the HDPE pipe. On the ductile iron pipe side, a Megalug flange is attached to the pipe and a gasket is installed over the pipe and into the sleeve before bolting the Megalug to the Sleeve flange. A standard HDPE MJ Adapter kit is used on the HDPE pipe side to complete the assembly.
2. Contractor is to follow manufacturer's recommended procedures for this assembly.

G. HDPE Pipe Connection to DI or PVC Bell End;
1. Flex restraint pieces are electro-fused to the HDPE pipe to achieve the proper stab depth in the PVC or DI bell and the restraint harness plate is attached behind them. The opposite end of the restraint harness is attached behind the DI /PVC hub.
2. Install the HDPE pipe in the PVC/DI bell until it bottoms out on the flex restraints and tighten the tie rods to prevent the assembly from pulling apart.
3. A stiffener is to be installed in the HDPE pipe end.
4. Contractor is to follow manufacturer's recommended procedures for this assembly

H. Mechanical Connection – HPDE to PVC;
   1. Provide coupling on plain-end PVC pipe to plain-end HDPE pipe without special adapters.
   2. When connecting HDPE pipe to a mechanical coupling, the fitting unless otherwise stated by the coupling manufacturer.

2.6 PIPING SPECIALTIES

A. Transition Fittings: Manufactured fitting or coupling same size as, with pressure rating at least equal to and ends compatible with, piping to be joined.

B. Utility Markers: All plastic pipe pumping mains shall have an electronic marker system furnished and installed complete with marker locator.
   1. Markers shall be installed in a horizontal position 3 to 4 feet below the ground surface.
   2. A marker shall be placed over every buried tee, bend, bore pit, or saddle fitting, at intervals no greater than 100 feet along pumping mains and where directed by ENGINEER.
   3. Holes shall be excavated over bored or directionally drilled pumping main for placement of markers

C. Tracer wire is to be installed on all water main distribution lines and service lines.
   1. For directional bores tracer wire shall be:
      a. Stainless steel minimum thickness of 6 gauge and be strung continuously along the pumping main.
      b. Directionally Drilled tracer wire to be Copperhead ‘Soloshot’ Directional Drill Wire 1150# Break Load or equal.
   2. For conventional open cut construction tracer wire shall be:
      a. Copper wire shall be:
         1) A minimum thickness of 10 gauge and be strung continuously along the pumping main.
         2) #10 AWG high-strength, high density conductor (HS-CCS) insulated with a minimum 30 mil HDPE and rated for direct burial use at minimum 30 volts. Must have 31% conductivity and break load 600# minimum.
         3) Direct bury tracer wire to be Copperhead 10 CCS High Strength 600# Break Load or equal.
   3. Tracer wire shall be installed in a continuous fashion. Install trace wire on top of pressure process piping and secure to main every five (5) feet with tape.
   4. The wire shall be brought to the surface and fastened to all manholes which may serve as access points. Trace wire shall be brought to the surface at least every five hundred (500) feet. Care should be taken not to damage the wire coating. If wire coating is damaged, the CONTRACTOR shall repair the damaged coating with electrical tape.
   5. Tracer wire systems shall terminate in Rhino Triview Tracing wire stations. Terminals shall be external and green for sanitary sewer systems. Terminals should be located at least every one thousand (1,000) feet or as shown on the drawings.
   6. CONTRACTOR shall test the locator system for continuity upon completed installation. Should tracer wires fail to test for continuity then the test shall be considered a failure.

7. Failure of the tracer wire shall result in the installation of utility markers at no additional cost to OWNER.

D. Warning Tape for metallic and non-metalic piping is listed in Section 312000 Earthmoving.

E. Bolts, Nuts and Washers
1. All bolts, nuts and washers used by the manufacturer to fabricate and assemble hydrants, tapping sleeves, resilient seated gate valves and butterfly valves shall be #316 stainless steel. All portions of these fasteners exposed after installation must be field coated with rust preservative spray paint (bituminous base non-toxic undercoat spray paint), which is approved by the City.
2. All bolts, nuts and washers used for the installation of sleeves, couplings, and mechanical joint fittings shall be COR-BLUE approved equal. Use of #316 stainless steel nuts, bolts and washers for field installed mechanical joints may be permitted only upon written approval of the City Engineer.

2.7 GATE VALVES

A. AWWA, Cast-Iron Gate Valves:
1. Nonrising-Stem, Resilient-Seated Gate Valves, for water main pipe sixteen inches (16”) and smaller in diameter:
a. Description: Gray- or ductile-iron body and bonnet; with bronze or gray- or ductile-iron gate, resilient seats, bronze stem, and stem nut. ate valve stems shall be high tensile strength, non-rising type with double O-Ring stem seals. The gate valve wedge shall be ductile iron encased in an EPDM rubber covering which shall form the sealing surface and provide sealing in either direction.
1) Standard: AWWA C515-01.
2) Minimum Working Pressure Rating: 250 psig.
3) End Connections: Mechanical joint.
4) Operating Nut: 2-inch
5) Interior Coating: Complying with AWWA C550.
6) All nuts, bolts and washers for installation on sleeves, couplings and mechanical joint connections shall be Cor-Blue or approved equal.
7) All nuts, bolts and washers used by manufacturer to fabricate and assemble gate valves shall be #316 stainless steel and exposed portions shall be field coated with pipe mastic or an approved corrosion protective spray.
8) Provide one operating wrench of suitable length.
b. Direction of Open: Open valve by turning operating nut to left or counterclockwise.
c. Gate Valves shall be Mueller A-2360 Series or EJIW Flowmaster Series or City of Brighton approved equal.

2.8 GATE VALVE ACCESSORIES AND SPECIALTIES

A. Tapping-Sleeve Assemblies:
1. Valve
a. Valve: AWWA, cast-iron, nonrising-stem, resilient-seated gate valve with one raised face flange mating tapping-sleeve flange.

b. All nuts, bolts and washers for installation on sleeves, couplings and mechanical joint connections shall be Cor-Blue or approved equal.
c. All nuts, bolts and wahsers used by manufacturer to fabricate and assemble gate valves shall be #316 stainless steel and exposed portions shall be field coated with pipe mastic or an approved corrosion protective spray.

2. Pressure Tapping Sleeve
   a. All pressure tapping sleeves shall be installed in an appropriately sized valve manhole. All pressure tapping sleeves shall be push on restrained joints by flanged outlet, stainless steel or ductile iron built in two (2) parts.
   b. All mechanical joint sleeves shall be Romac 452 All Stainless Steel, Clow F5205, Mueller H-615, American Darling H-1004 or approved alternate.
   c. No live taps will be allowed where the outlet is the same size as the main.
   d. There shall be no direct taps on PVC waterman. Saddles must be used for all tapping operations. Whne tapping pressurized PVC watermain, the Contractor is to use a heavy protective blanket 4 foot by 6 foot with a hole for the tapping machine or a tapping shield. System pressures shall be reduced during tapping. Contractor assumes all liability relative to the safety and injury resulting from tapping PVC Pipe.

B. Valve Boxes: Comply with AWWA M44 for cast-iron valve boxes. Include top section, adjustable extension of length required for depth of burial of valve, plug with lettering "WATER," and bottom section with base that fits over valve and with a barrel approximately 5 inches in diameter.
   1. Provide #6 base with valves 8-inches or less.
   2. Provide #8 base with valves greater than 8-inches.
   3. Operating Wrenches: Steel, tee-handle with one pointed end, stem of length to operate deepest buried valve, and socket matching valve operating nut.

C. Indicator Posts: UL 789, FMG-approved, vertical-type, cast-iron body with operating wrench, extension rod, and adjustable cast-iron barrel of length required for depth of burial of valve.

2.9 CHECK VALVES

A. AWWA Check Valves:
   1. Description: Swing-check type with resilient seat. Include interior coating according to AWWA C550 and ends to match piping.
      a. Standard: AWWA C508.
      b. Pressure Rating: 175 psig.

2.10 BUTTERFLY VALVES

A. AWWA Butterfly Valves:
   1. Description: Rubber seated.
      a. Standard: AWWA C504.
      b. Body: Cast or ductile iron.
      c. Body Type: Wafer.
      d. Pressure Rating: 150 psig.

2.11 PLUG VALVES

A. Plug Valves:
   1. Description: Resilient-seated eccentric.
      a. Standard: MSS SP-108.
      b. Body: Cast iron.
      c. Pressure Rating: 175-psig minimum CWP.
      d. Seat Material: Suitable for potable-water service.

2.12 CORPORATION VALVES AND CURB VALVES

A. Manufacturers:
   1. Corporation Valves and Curb Valves shall be one of the following:

SIZE	VALVE TYPE	MUELLER	FORD
$^{3}/_{4}$-in	Curb Valve with Minneapolis Compression	MNP COMP B25155	B44-333M-NL
1-in	Curb Valve with Minneapolis Compression	MNP COMP B25155	B44-444M-NL
1.5-in	Curb Valve with Minneapolis Compression	MNP COMP B25155	B44-66M-NL
2-in	Curb Valve with Minneapolis Compression	MNP COMPB25155	B44-777M-NL
$^{3}/_{4}$-in	Corporation Stop	CCXCOMP H15008	F-1000-3-NL
1-in	Corporation Stop	CCXCOMP H15008	F-1000-4-NL
1.5-in	Corporation Stop	IPXCOMP H15013	FB1000-6-NL
2-in	Corporation Stop	IPXCOMP H15013	FB-1000-7-NL
3/4-in	Compression Couplers	CPLG CTS H15403	C44-33-NL PJ
1-in	Compression Couplers	CPLG CTS H15403	C44-44-NL PJ
1.5-in	Compression Couplers	CPLG CTS H15403	C44-66-NL PJ
2-in	Compression Couplers	CPLG CTS H15403	C44-77-NL CJ

   2. All corporation valve, curb valves, and fittings shall contain low/no lead.

B. Service-Saddle Assemblies: Comply with AWWA C800. Include saddle and valve compatible with tapping machine.
   1. Service Saddle:
      a. Copper alloy with seal and AWWA C800, threaded outlet for corporation valve.

b. C909 PVC Pipe Saddles of Corporations. Bronzed bodied saddles with a wide single stainless steel strap or full circle body clamp double bolted to each side of the saddle shall be used on pipe 6-inch to 12-inch. The saddle bocy shall be manufactured from cast bronse in accordance with ASTM B62 of B584 and AEEA C800. The single strap shall have double bolts on each end of the strap to connect to the bronze saddle. The ears of the strap shall turn inward and rest against the inside of the strap. The gasket shall be Buna N. The saddle shall be threaded with 1-inch or 2-inch iron pipe threads.

c. Tapping saddles shall be installed a minimum of 3 freet from the edge of the saddle to any pipe joint or other saddle.

2. Corporation Valve: Bronze body and ground-key plug, with AWWA C800, threaded inlet and outlet matching service piping material.

C. Curb Valves: Comply with AWWA C800. Include bronze body, ground-key plug or ball, and wide tee head, with inlet and outlet matching service piping material.

D. Service Boxes for Curb Valves: Similar to AWWA M44 requirements for cast-iron valve boxes. Include cast-iron telescoping top section of length required for depth of burial of valve, plug with lettering "WATER," and bottom section with base that fits over curb valve and with a barrel approximately 3 inches in diameter.

1. Curb boxes shall be:

$^{3}/_{4}$-in curb valve	Mueller H-10300
1-in curb valve	Mueller H-10300
1.5-in curb valve	Mueller H-10302-99005
2-in curb valve	Mueller H-10302-99005

2. Shutoff Rods: Steel, tee-handle with one pointed end, stem of length to operate deepest buried valve, and slotted end matching curb valve. Rods are not to be used on valves greater than1-inch.

2.13 WATER METERS

A. Water meters will be furnished by the City of Brighton at the Contractor’s expense.

2.14 RELIEF VALVES

A. Air-Release Valves:

1. Description: Hydromechanical device to automatically release accumulated air.

a. Standard: AWWA C512.

b. Pressure Rating: 300 psig.

c. Body Material: Cast iron.

d. Trim Material: Stainless steel.

e. Water Inlet Size: Per Drawings Specifications

f. Air Outlet Size: Per Drawings Specifications

g. Orifice Size: Per Drawings Specifications

h. Design Air-Release Capacity: Per Drawing Specifications

B. Combination Air Valves:

1. Description: Float-operated, hydromechanical device to automatically release accumulated air or to admit air.

a. Standard: AWWA C512.
b. Pressure Rating: 300 psig.
c. Body Material: Cast iron.
d. Trim Material: Stainless steel.
e. Inlet and Outlet Size: Per Drawings Specifications
f. Orifice Size: Per Drawings Specifications
g. Design Air Capacity: Per Drawings Specifications

2.15 FIRE HYDRANTS

A. Dry-Barrel Fire Hydrants:
1. Description: Freestanding, with one NPS 4-1/2 and two NPS 2-1/2 outlets, 5-1/4-inch main valve, drain valve, and NPS 6 mechanical-joint inlet. Include interior coating according to AWWA C550. Hydrant shall have cast-iron or ductile-iron body, compression-type valve opening against pressure and closing with pressure.
a. Type: East Jordan Iron Works (EJIW) 5BR-250
b. Fittings: 5-inch Storz Nozzle and Cap integral with fire hydrant assembly.
1) Provide Storz Nozzle and Cap by Kockek "big water" Brass/Aluminum Fire Hydrant Stortz Nozzle and Cap or Harrington Inc. Intergral Storz with Cap #HIHS-EJIW-50-45 or approved equal.
c. Bibs: Two (2) 2- $^{1}/_{2}$ –inch National Thread Standard (NTS)
d. Standard: AWWA C502.
e. Pressure Rating: 250 psig.
f. All nuts, bolts and washers for installation on sleeves, couplings and mechanical joint connections shall be Cor-Blue or approved equal.
g. All nuts, bolts and wahsers used by manufacturer to fabricate and assemble gate valves shall be #316 stainless steel and exposed portions shall be field coated with pipe mastic or an approved corrosion protective spray.
h. Operating and Cap Nuts: Pentagon, 1-1/2 inches point to flat.
i. Direction of Opening: Open hydrant valve by turning operating nut to left or counterclockwise.
j. Exterior Finish: Red alkyd-gloss enamel paint, unless otherwise indicated.

B. Dry Fire Hydrants:
1. Dry Hydrants are discouraged. The use of dry hydrants will require special approval by the Brighton Area Fire Authority and shall meet the minimum requirements of the National Fire Protection Association, NFPA 1142, Water Supply for Suburban and Rural Fire Fighting.

2.16 PLUGGING DEAD ENDS

A. Standard plugs shall be inserted into the bells of all dead ends of pipes, tees or crosses, and spigot ends shall be capped. Plugs or caps shall be joined to the pipe or fitting in the manner specified and shall be secured with thrust blocks or mechanical joint restraints.

PART 3 - EXECUTION

3.1 EARTHWORK

A. Refer to Section 312000 "Earth Moving" for excavating, trenching, and backfilling.

3.2 PIPING APPLICATIONS

A. General: Use pipe, fittings, and joining methods for piping systems according to the following applications.

B. Transition couplings and special fittings with pressure ratings at least equal to piping pressure rating may be used, unless otherwise indicated.

C. Do not use flanges or unions for underground piping.

D. Flanges, unions, grooved-end-pipe couplings, and special fittings may be used, instead of joints indicated, on aboveground piping and piping in vaults.

E. Underground water-service piping NPS 3/4 to NPS 3 shall be any of the following:
   1. Soft copper tube, ASTM B 88, Type K; copper, pressure-seal fittings; and pressure-sealed joints.

F. Underground Combined Water-Service and Fire-Service-Main Piping NPS 6 to NPS 12 shall be any of the following:
   1. Ductile-iron, mechanical-joint pipe; ductile-iron, mechanical-joint fittings; and mechanical.
   2. PVC, AWWA Class 200 pipe listed for fire-protection service; PVC fabricated or molded fittings of same class as pipe; and gasketed joints.

3.3 VALVE APPLICATIONS

A. General Application: Use mechanical-joint-end valves for NPS 3 and larger underground installation. Use threaded- or flanged-end valves for installation in vaults. Use UL/FMG, nonrising-stem gate valves for installation with indicator posts. Use corporation valves and curb valves with ends compatible with piping, for NPS 2 and smaller installation.

B. Drawings indicate valve types to be used. Where specific valve types are not indicated, the following requirements apply:
   1. Underground Valves, NPS 3 and Larger: AWWA, cast-iron, nonrising-stem, high-pressure, resilient-seated gate valves with valve box.
   2. Use the following for valves in vaults and aboveground:
      a. Gate Valves, NPS 2 and Smaller: Bronze, nonrising stem.
      b. Gate Valves, NPS 3 and Larger: AWWA, cast iron, OS&Y rising stem, resilient seated.
      c. Check Valves: AWWA C508, swing type.
   3. Pressure-Reducing Valves: Use for water-service piping in vaults and aboveground to control water pressure.

4. Relief Valves: Use for water-service piping in vaults and aboveground.
   a. Air-Release Valves: To release accumulated air.
   b. Combination Air Valves: To release or admit air.

3.4 PIPING SYSTEMS - COMMON REQUIREMENTS

A. See Section 330500 "Common Work Results for Utilities" for piping-system common requirements.

3.5 PIPING INSTALLATION

A. Water-Main Connection: Arrange with the City of Brighton Utilities Division for tap of size and in location indicated in water main.

B. Make connections larger than NPS 2 with tapping machine according to the following:
   1. Install tapping sleeve and tapping valve according to MSS SP-60.
   2. Install tapping sleeve on pipe to be tapped. Position flanged outlet for gate valve.
   3. Use tapping machine compatible with valve and tapping sleeve; cut hole in main. Remove tapping machine and connect water-service piping.
   4. Install gate valve onto tapping sleeve. Comply with MSS SP-60. Install valve with stem pointing up and with valve box.

C. Make connections NPS 2 and smaller with drilling machine according to the following:
   1. Install service-saddle assemblies and corporation valves in size, quantity, and arrangement required by utility company standards.
   2. Install service-saddle assemblies on water-service pipe to be tapped. Position outlets for corporation valves.
   3. Use drilling machine compatible with service-saddle assemblies and corporation valves. Drill hole in main. Remove drilling machine and connect water-service piping.
   4. Install corporation valves into service-saddle assemblies.
   5. Install manifold for multiple taps in water main.
   6. Install curb valve in water-service piping with head pointing up and with service box.

D. Comply with NFPA 24 for fire-service-main piping materials and installation.
   1. Install PE corrosion-protection encasement according to ASTM A 674 or AWWA C105.
   2. Install copper tube and fittings according to CDA's "Copper Tube Handbook."

E. Install ductile-iron, water-service piping according to AWWA C600 and AWWA M41.

F. Install PE pipe according to ASTM D 2774 and ASTM F 645.

G. Install PVC, AWWA pipe according to AWWA C605 and AWWA M23.

H. Bury piping with depth of cover over top at least 5.5-feet and no greater than 8.5-feet below finished grade.

I. Install piping by tunneling or jacking, or combination of both, under streets and other obstructions that cannot be disturbed.

J. To prevent unwanted water intrusion, open ends of pipe shall be closed temporarily with a watertight bulkhead.

K. Extend water-service piping and connect to water-supply source and building-water-piping systems at outside face of building wall in locations and pipe sizes indicated.
   1. Terminate water-service piping at building wall until building-water-piping systems are installed. Terminate piping with caps, plugs, or flanges as required for piping material. Make connections to building-water-piping systems when those systems are installed.

L. Install underground piping with restrained joints at horizontal and vertical changes in direction. Use restrained-joint piping, thrust blocks, anchors, tie-rods and clamps, and other supports.

3.6 JOINT CONSTRUCTION

A. See Section 330500 "Common Work Results for Utilities" for basic piping joint construction.

B. Make pipe joints according to the following:
   1. Copper-Tubing, Pressure-Sealed Joints: Use proprietary crimping tool and procedure recommended by copper, pressure-seal-fitting manufacturer.
   2. Ductile-Iron Piping, Gasketed Joints for Water-Service Piping: AWWA C600 and AWWA M41.
   3. PE Piping Insert-Fitting Joints: Use plastic insert fittings and fasteners according to fitting manufacturer's written instructions.
   4. PVC Piping Gasketed Joints: Use joining materials according to AWWA C900. Construct joints with elastomeric seals and lubricant according to ASTM D 2774 or ASTM D 3139 and pipe manufacturer's written instructions.

C. JOINT HARNESSING
   1. Pipe and fittings that require harnessing shall be provided with standard lugs ASTM A 283, Grade B, or A 285, Grade C, or equal, meeting the requirements of AWWA Specification C111 or AWWA Manual M11, unless otherwise noted.
   2. Harness tie rods and nuts shall be mild steel meeting the requirements of ASTM A 193, Grade B7, or A 307, Grade B, or equal with American Standard threads. The nuts shall seat on steel plate washers. The rod, washers, and nuts shall be hot-dip galvanized ASTM A 153.

3.7 ANCHORAGE INSTALLATION

A. Anchorage, General: Install water-distribution piping with restrained joints. Anchorages and restrained-joint types that may be used include the following:
   1. Locking mechanical joints.
   2. Set-screw mechanical retainer glands.
   3. Bolted flanged joints.
   4. Heat-fused joints.

B. Install anchorages for tees, plugs and caps, bends, crosses, valves, and hydrant branches. Include anchorages for the following piping systems:
   1. Gasketed-Joint, Ductile-Iron, Water-Service Piping: According to AWWA C600.

2. Gasketed-Joint, PVC Water-Service Piping: According to AWWA M23.
3. Bonded-Joint Fiberglass, Water-Service Piping: According to AWWA M45.

C. Apply full coat of asphalt or other acceptable corrosion-resistant material to surfaces of installed ferrous anchorage devices.

3.8 VALVE INSTALLATION

A. AWWA Gate Valves: Comply with AWWA C600 and AWWA M44. Install each underground valve with stem pointing up and with valve box.

B. AWWA Valves Other Than Gate Valves: Comply with AWWA C600 and AWWA M44.

C. Corporation Valves and Curb Valves: Install each underground curb valve with head pointed up and with service box.

D. Pressure-Reducing Valves: Install in vault or aboveground between shutoff valves

E. Relief Valves: Comply with AWWA C512. Install aboveground with shutoff valve on inlet.

3.9 FIRE HYDRANT INSTALLATION

A. General: Install each fire hydrant with separate gate valve in supply pipe, anchor with restrained joints or thrust blocks, and support in upright position.

B. AWWA Fire Hydrants: Comply with AWWA M17.

3.10 FLUSHING HYDRANT INSTALLATION

A. Install post-type flushing hydrants with valve below frost line and provide for drainage. Support in upright position. Include separate gate valve or curb valve and restrained joints in supply piping.

B. Install ground-type flushing hydrants with valve below frost line and provide for drainage. Install hydrant box flush with grade. Include separate gate valve or curb valve and restrained joints in supply piping.

C. Install sampling stations with valve below frost line and provide for drainage. Attach weather-resistant housing and support in upright position. Include separate curb valve in supply piping.

3.11 FIELD QUALITY CONTROL

A. Piping Tests: Conduct piping tests before joints are covered. Fill pipeline 24 hours before testing and apply test pressure to stabilize system. Use only potable water.

B. After completion, each run of pipe shall be tested by CONTRACTOR in the presence of ENGINEER. All appurtenances such as service connections, corporation stops, and curb stops shall be tested with the run of pipe.
1. Any leaks shall be made tight.

2. Under this Work, CONTRACTOR shall furnish all water or air, piping, bulkheads, pumps or compressors, gauge, and other equipment required for the test.
3. The section of pipe to be tested shall be cleaned and isolated by valves or plugs, and shall not exceed 2,000 feet for any individual test. Such valves or plugs shall be designed to hold against the test pressure. Sections of pipe shall have an opening through which air or water can be introduced. The supply line shall be fitted with suitable control valves and a pressure gauge for continually measuring the pressure. The pressure gauge shall have a minimum diameter of 3-1/2 inches and a range compatible with the test pressure. Pipelines that cannot be closed for a direct pressure test shall be tested by filling the tanks to which they are connected to the highest operating level or installing temporary test bulkheads. After completion of tests, all pipes shall be drained. Buried pipelines shall be pressure tested with all pipe joints exposed for visual inspection unless otherwise directed by ENGINEER.
4. If requested by ENGINEER, CONTRACTOR shall furnish proposed test procedures for approval including pipe identification, test pressure and a description of the method of testing.
5. In the event that the leakage exceeds the specified amount, the joints in the line shall be carefully inspected for leaks and repaired where necessary. Any pipes or special castings found to be cracked shall be removed and replaced with new pieces by CONTRACTOR. After this Work has been done, the test shall be repeated. Final acceptance of the lines will not be made until satisfactory tests have been passed.

C. All PVC pipe shall be in accordance with ASTM D1599.
1. The manufacturer of each shipment of pipe may be required to supply a statement certifying that each lot or load of pipe has been subjected to the tests specified for PVC pipe and has been found to meet all the requirements of AWWA C909 as applicable.
2. PVC pipe which has been gouged shall not be used. Any scratch or gouge in the pipe that is measured as 10% if more if the wall thickness shall be cause for rejection of that pipe. This shall be monitored by the owner during all phases of construction. PVC pipe which has received minor scratches during handling may be used solely at the discretion of the City. PVC pipe shall not be rolled off delivery trucks or other transporting vehicles.
3. Contractor to install PVC watermain in strict accordance with the manufacturer's installation guide, AWWA C605 and AWWA M23 latest revisions thereof. If any of these documents are found to conflict, the most restrictive of the requirements shall be met.
4. Do not install any PVC pipe contaminated with a petroleum product (inside or out). Do not install any PVC pipe that shows evidence4 of exposure to sunlight, age, surface deterioration or other physical damage.
5. PVC pipe shall be supported uniformly will be stored and not stacked with weight on the bells. All pipe shall be stored in such a way to protect it from exposure from direct sunlight. The pipe may be covered with an opaque material will permitting adequate air circulation above and around the pipe. Gaskets shall be stored in a cold, dark place out of the direct rays of the sun. No pipe showing evidence of sun burning shall be installed.

D. Hydrostatic Tests: Test at not less than one-and-one-half times working pressure.

1. Hydrostatic Testing (except HDPE): The section of pipe to be tested shall be filled with water, the entrained air within the line shall be removed, and water shall be pressurized up to test pressure at the pipe low point within 5 to 10 minutes.

a. The test period shall start immediately after initial pressurization. The line shall be maintained under the test pressure for a continuous 2-hour period.

b. The section of pipe to be tested shall hold the test pressure with no more than a 5 percent loss in pressure over the test period or the leakage per hour under the conditions of test shall not exceed values determined by the following equation:

$$L = \frac{SD\sqrt{P}}{148{,}000}$$

where L = allowable leakage per hour (gallons)
S = length of pipe in test (feet)
D = nominal diameter of pipe (inches)
P = average test pressure (psi, gauge)

c. Piping with flanged, grooved coupling, screwed, socket type, and welded joints shall be completely tight at the designated test pressure.

d. The test pressure shall not vary by more than 5 psi throughout the entire test period.

2. Hydrostatic Testing of HDPE Pipe: The section of pipe to be tested shall be filled with water, the entrained air within the line shall be removed, and water shall be pressurized up to test pressure at the pipe low point within 5 to 10 minutes. To compensate for expansion after initial pressurization, sufficient make-up water shall be added into the pipe system at hourly intervals for 3 hours to raise the pressure back up to the test pressure.

a. After completion of this initial phase, approximately 4 hours after start of the testing procedure, the actual test shall begin.

b. The system shall be pressurized up to the test pressure and by make-up water held continuously at the test pressure for at least 1 hour, but no more than 3 hours.

c. The make-up water used during the test shall be measured and shall not exceed the allowance given in the following table.

ALLOWANCE FOR EXPANSION OF HDPE PIPE UNDER TEST PRESSURE

Allowance for Expansion
(U.S. Gallons per 100 Feet of Pipe)

Nominal Pipe Size (In.)	1-Hour Test	2-Hour Test	3-Hour Test
3	0.10	0.15	0.25
4	0.13	0.25	0.40
6	0.30	0.60	0.90
8	0.50	1.0	1.5
10	0.75	1.3	2.1
11	1.0	2.0	3.0
12	1.1	2.3	3.4
14	1.4	2.8	4.2
16	1.7	3.3	5.0
18	2.2	4.3	6.5
20	2.8	5.5	8.0
22	3.5	7.0	10.5
24	4.5	11.1	16.8
28	5.5	11.1	16.8
32	7.0	14.3	21.5
36	9.0	18.0	27.0
40	11.0	22.0	33.0
48	15.0	27.0	43.0
54	22.0	35.0	55.0

d. If there are no visible leaks or pressure drops greater than 5 psi during the actual test period, the system passes the test. If leakage is revealed, however, the defect shall be corrected and a retest shall be made after a 24-hour minimum depressurized recuperation period.

3. Pneumatic Testing: The section of pipe to be tested shall be filled with air and pumped up to test pressure.
   a. Sufficient time shall be allowed for the air pressures to stabilize at the test pressure. After the stabilization period, the air control valve shall be closed and the test period started. The section of pipe shall be maintained under the test pressure for a continuous 4-hour period with no more than a 10 percent loss in pressure over the entire test period.
   b. Pneumatic testing of HDPE pipe shall not be allowed.
4. Each valve assembly shall be tested by CONTRACTOR; the test shall consist of opening and closing the valve.
5. Each hydrant assembly shall be tested by CONTRACTOR; the test shall consist of flushing the hydrant for a minimum of ten minutes. During the test period the 6-inch gate valve shall be closed and opened. CONTRACTOR shall furnish necessary hoses for the disposal of OWNER-furnished water.

E. Prepare reports of testing activities.

3.12 IDENTIFICATION

A. Install continuous underground detectable warning tape during backfilling of trench for underground water-distribution piping. Locate below finished grade, directly over piping. Underground warning tapes are specified in Section 312000 "Earth Moving."

3.13 CLEANING

A. Disinfection Products:
   1. Liquid Chlorine shall not be allowed.

B. Clean and disinfect water-distribution piping as follows:
   1. Purge new water-distribution piping systems and parts of existing systems that have been altered, extended, or repaired before use.
   2. Use purging and disinfecting procedure prescribed by authorities having jurisdiction or, if method is not prescribed by authorities having jurisdiction, use procedure described in AWWA C651 or do as follows:
      a. Proper techniques shall be followed during construction to keep water mains clean and dry. New water mains shall be flushed thoroughly before disinfection.
      b. Disinfection of new water mains is required.
         1) Fill system or part of system with water/chlorine solution containing at least 50 ppm of chlorine; isolate and allow to stand for 24 hours.
         2) Drain system or part of system of previous solution and refill with water/chlorine solution containing at least 200 ppm of chlorine; isolate and allow to stand for 3 hours.
   3. Before placing a new water main in service, all of the following shall occur:
      a. Before collection of each bacteriologic sample, heavily chlorinated water shall be flushed from the main and appurtenances until the chlorine measurements in the water leaving the main is absent or no higher than that normally maintained in the distribution system.
      b. Not fewer than 2 consecutive water samples for bacteriological analysis shall be collected 24 hours apart unless an alternate interval is approved by the department.
      c. An analysis shall not indicate the presence of coliform. Analyses for other contaminates may be required if the department has reason to believe that these contaminates are present.

END OF SECTION 221113

SECTION 221313 - SANITARY SEWERS

PART 1 - GENERAL

1.1 SUMMARY

A. Section Includes:
1. Pipe and fittings.
2. Nonpressure and pressure couplings.
3. Expansion joints and deflection fittings.
4. Cleanouts.
5. Encasement for piping.
6. Manholes.

1.2 ACTION SUBMITTALS

A. Product Data: For the following:
1. Expansion joints and deflection fittings.

B. Shop Drawings: Submit in accordance with Section 013300_Submittal Procedures covering the items included under this Section. Shop Drawing submittals shall include:
1. For manholes. Include plans, elevations, sections, details, and frames and covers.
2. Shop Drawings shall be fully dimensioned Drawings showing the piping in full detail with exact locations, dimensions, and schedules of all pipe, fittings, hangers, supports, and appurtenances. They shall be made in accordance with the general information shown on Drawing and special information furnished by the several manufacturers of equipment. Where special fittings are required, they shall be shown in large detail with all necessary dimensions.
3. Each pipe section, special fitting, casting, sleeve, and appurtenance shall be identified on Drawings by its respective erection mark.

C. Record Drawings: At Project closeout, submit record Drawings of installed products, in accordance with requirements of City of Brighton Standards.

1.3 INFORMATIONAL SUBMITTALS

A. Field quality-control test reports.

1.4 CLOSEOUT SUBMITTALS

A. Operation and Maintenance Data: For specialties to include in emergency, operation, and maintenance manuals.

1.5 QUALITY ASSURANCE

A. Regulatory Requirements:
1. Comply with standards requirements of City of Brighton for potable-water-service piping, including materials, installation and testing.

2. Comply with the Recommended Standards for Wastewater Facilities (Ten States Standard) Great Lakes - Upper Mississippi River Board of State and Provincial Public Health and Environmental Managers.

B. Piping materials shall bear label, stamp, or other markings of specified testing agency.

1.6 DELIVERY, STORAGE, AND HANDLING

A. Do not store plastic manholes, pipe, and fittings in direct sunlight.

B. Protect pipe, pipe fittings, and seals from dirt and damage.

C. Handle manholes according to manufacturer's written rigging instructions.

1.7 PROJECT CONDITIONS

A. Interruption of Existing Sanitary Sewerage Service: Do not interrupt service to facilities occupied by the City of Brighton or others unless permitted under the following conditions and then only after arranging to provide temporary service according to requirements indicated:
1. Do not proceed with interruption of service without the City of Brighton Utility Divisions written permission.

PART 2 - PRODUCTS

2.1 DUCTILE-IRON, GRAVITY SEWER PIPE AND FITTINGS

A. Pipe: ASTM A 746, for push-on joints.

B. Standard Fittings: AWWA C110, ductile or gray iron, for push-on joints.

C. Compact Fittings: AWWA C153, ductile iron, for push-on joints.

D. Gaskets: AWWA C111, rubber.

2.2 DUCTILE-IRON, PRESSURE PIPE AND FITTINGS

A. Push-on-Joint Piping:
1. Pipe: AWWA C151 (NPS 3 to NPS 64).
2. Standard Fittings: AWWA C110, ductile or gray iron (NPS 3 to NPS 48).
3. Compact Fittings: AWWA C153 (NPS 3 to NPS 64).
4. Gaskets: AWWA C111, rubber, of shape matching pipe and fittings.

B. Mechanical-Joint Piping:
1. Pipe: AWWA C151, with bolt holes in bell (NPS 3 to NPS 48).
2. Standard Fittings: AWWA C110, ductile or gray iron, with bolt holes in bell (NPS 3 to NPS 48).
3. Compact Fittings: AWWA C153, with bolt holes in bells (NPS 3 to NPS 48).
4. Glands: Cast or ductile iron; with bolt holes and high-strength, cast-iron or high-strength, low-alloy steel bolts and nuts.
5. Gaskets: AWWA C111, rubber, of shape matching pipe, fittings, and glands.

2.3 ABS PIPE AND FITTINGS

A. ABS Sewer Pipe and Fittings: ASTM D 2751, with bell-and-spigot ends for gasketed joints.
   1. NPS 3 to NPS 6: SDR 35.
   2. NPS 8 to NPS 12 : SDR 42.

B. Gaskets: ASTM F 477, elastomeric seals.

2.4 PVC PIPE AND FITTINGS

A. PVC Type PSM Sewer Piping:
   1. Pipe: ASTM D 3034, SDR 26, PVC Type PSM sewer pipe with bell-and-spigot ends for gasketed joints.
   2. Fittings: ASTM D 3034, PVC with bell ends.
   3. Gaskets: ASTM F 477, elastomeric seals.

B. PVC Gravity Sewer Piping (NPS 18 to NPS 36):
   1. Pipe and Fittings: ASTM F 679, T-1 wall thickness, PVC gravity sewer pipe with bell-and-spigot ends and with integral ASTM F 477, elastomeric seals for gasketed joints.

C. PVC Pressure Piping:
   1. Pipe: AWWA C900, Class 200 PVC pipe with bell-and-spigot ends for gasketed joints.
   2. Fittings: AWWA C900, Class 200 PVC pipe with bell ends.
   3. Gaskets: ASTM F 477, elastomeric seals.

2.5 HDPE PIPE AND FITTINGS

A. High density polyethylene pipe conforming to ASTM D1598 and D3350, AWWA C906 and ANSI/NSF-14 and 61, material shall be comprised of PE 3408 Resin with a cell classification of PE334434C.
   1. Pipe shall have a wall thickness of DR-11 and a working pressure rating of 160 psi.
   2. Materials and workmanship shall be as required by AWWA M55, PE Pipe Design and Installation Manual and ASTM F714 Manufacturing requirements.
   3. HDPE pipe, appurtenances, and installation methods shall conform to the latest addition of AWWA C906. The AWWA Standard Code C906 identification must appear on the exterior wall print line of the HDPE pipe proposed for potable use and installation. All DDPE materials must be listed and approved for use with potable water under ANSI/NSF Standard 14. ANSI/NSF Standard 14 meets the requirements of ANSI/NSD Standard 61. The exterior wall print lines of all HDPE pipe proposed for installation and potable use must bear the NSF-pw identification.
   4. Pipe shall be furnished in Ductile Iron pipe sizes.
   5. Pipe shall be handled and installed in accordance with manufacturer's recommendations.
   6. Pipe shall be furnished with continuous, permanent print line identifying pipe size, pressure rating, trade name, material classification, ASTM and NSF standards, pipe test category, plant location and shift, date of manufacture, operator and extruder numbers, and supplier of raw materials.
   7. Exterior wall print line must bear NSF – PW identification.

8. No installations shall exceed ten feet (10') of cover unless approved by the Engineer or as directed by the plans and specifications. The City Engineer must approve the use of HDPE pipe in any water main project within the City.

B. Fittings and Couplings; Fittings and specials shall be of the same construction and design as the pipe. The manufacturer of the pipe shall be the same as the manufacturer of the fittings and other fabrications.

C. Joints; Joints shall be thermally butt-fused according to the recommendations of the manufacturer.

D. HDPE Restraint Methods;
   1. Restrained joints include butt fusions, electro-fusions, socket fusions, bolted flange connections, MJ Adapter connections or other restrained mechanical connections.
   2. Provide joint restraints on long string of butt fused HDPE to bell and spigot or mechanical sleeve joint.
      a. Wall Anchor;
         1) Restrain the transition connection by butt fusing a Wall Anchor in the HDPE pipeline close to the connection and pouring a concrete anchor around it as shown in Details. Refer to the pipe manufacturer's recommendations on anchor size and pull out loads.
      b. Mechanical Joint.
         1) Restrain the transition connection and several non-PE bell and spigot joints down line from the transition connection.
         2) Distance of pipe restraint needs to be identified on the drawings and noted in the HDPE to DIP Connection Detail. At minimum the Contractor shall provide pipe restraint per the requirements of a "Dead End" pipe as noted in the "Pipe Restraint Schedule" or 3 Pipe Lengths, whichever is greater.

E. HDPE to DIP and DIP Fittings;
   1. MJ (mechanical joint) Adapters are to be used to connect polyethylene pipe to mechanical joint fittings and appurtenances that meet AWWA C111/ANSI A21.11.
   2. Slip the Gland Ring over the pipe end and then butt fuse the HDPE MJ Adapter to the end of the pipe using the PPI Generic Butt Fusion Joining Procedure TR-33. Install the Gasket over the MJ Adapter and align the fitting with the socket hub of the ductile iron fitting. Lubricate the gasket, the end of the MJ adapter, and the inside of the socket hub with an approved pipe lubricant meeting AWWA C111. Do not use soapy water.
   3. Insert the MJ Adapter into the socket hub. Make sure it is evenly and completely seated in the socket hub. The MJ Adapter and the socket hub must be aligned straight into each other. Insert the gland bolts, and run the nuts up finger-tight. Tighten the gland bolts evenly to the fitting manufacturer's recommended procedures.
   4. When connecting to a valve with an MJ connection, longer T-Bolts may be required. If the T-Bolts that come with the kit are not long enough for the assembly, use a coupling nut and Grade 5 all thread to make up the length required.

F. HDPE Flanged Connection to DI Fittings;
   1. Flanged joints can be used to attach HDPE pipe to valves or DI fittings using HDPE Flange Adapter, Back-Up Ring, Gaskets and Bolts, Nuts and Washers.
   2. Connection is made by sliding the Back-Up Ring over the pipe end and then butt fusing the HDPE Flange Adapter to the end of the pipe using the PPI Generic Butt

Fusion Joining Procedure TR-33. Align the flanges and back-up rings and follow the fitting manufacturer's recommended procedures for bolting the flanges together. The service pressure rating for the back-up ring should meet or exceed the service pressure in the pipe.

3. Gaskets are required for connections between polyethylene and non-polyethylene flanges. The gasket manufacturer should recommend the gasket to use with polyethylene pipe. This is considered a "fully restrained joint" and typically does not need external restraint devices.

G. Solid DI Sleeve Connections to HDPE pipe;
   1. Solid Sleeves are ductile iron fittings designed to connect DI / PVC pipe to other piping materials including HDPE pipe. The solid sleeves is to have a flange or MJ hub to attach to the HDPE pipe. On the ductile iron pipe side, a Megalug flange is attached to the pipe and a gasket is installed over the pipe and into the sleeve before bolting the Megalug to the Sleeve flange. A standard HDPE MJ Adapter kit is used on the HDPE pipe side to complete the assembly.
   2. Contractor is to follow manufacturer's recommended procedures for this assembly.

H. HDPE Pipe Connection to DI or PVC Bell End;
   1. Flex restraint pieces are electro-fused to the HDPE pipe to achieve the proper stab depth in the PVC or DI bell and the restraint harness plate is attached behind them. The opposite end of the restraint harness is attached behind the DI /PVC hub.
   2. Install the HDPE pipe in the PVC/DI bell until it bottoms out on the flex restraints and tighten the tie rods to prevent the assembly from pulling apart.
   3. A stiffener is to be installed in the HDPE pipe end.
   4. Contractor is to follow manufacturer's recommended procedures for this assembly.

I. Mechanical Connection – HPDE to PVC;
   1. Provide coupling on plain-end PVC pipe to plain-end HDPE pipe without special adapters.
   2. When connecting HDPE pipe to a mechanical coupling, the fitting unless otherwise stated by the coupling manufacturer.

2.6 NONPRESSURE-TYPE TRANSITION COUPLINGS

A. Comply with ASTM C 1173, elastomeric, sleeve-type, reducing or transition coupling, for joining underground nonpressure piping. Include ends of same sizes as piping to be joined and corrosion-resistant-metal tension band and tightening mechanism on each end.

B. Sleeve Materials:
   1. For Plastic Pipes: ASTM F 477, elastomeric seal or ASTM D 5926, PVC.
   2. For Dissimilar Pipes: ASTM D 5926, PVC or other material compatible with pipe materials being joined.

C. Ring-Type, Flexible Couplings:
   1. Description: Elastomeric compression seal with dimensions to fit inside bell of larger pipe and for spigot of smaller pipe to fit inside ring.

2.7 EXPANSION JOINTS AND DEFLECTION FITTINGS

A. Ductile-Iron, Flexible Expansion Joints:
   1. Joints for Ductile Iron Pipe to be Tyton, Bell Tite, Fast Tite or equal.
   2. Description: Compound fitting with combination of flanged and mechanical-joint ends complying with AWWA C110 or AWWA C153. Include two gasketed ball-joint sections and one or more gasketed sleeve sections, rated for 250-psig minimum working pressure and for offset and expansion indicated.

B. CLEANOUTS
   1. PVC Cleanouts:
      a. Description: PVC body with PVC threaded plug. Include PVC sewer pipe fitting and riser to cleanout of same material as sewer piping.
      b. Cleanout to be constructed as noted in the City of Brighton Standard Sewer Details.
      c. PVC to meet ASTM D-3034.
      d. Cleanout lid to be heavy duty, EJIW 1574A or equal.

2.8 MANHOLES

A. Standard Precast Concrete Manholes:
   1. Description: ASTM C 478, precast, reinforced concrete, of depth indicated, with provision for sealant joints.
   2. Diameter: 48 inches minimum unless otherwise indicated.
   3. Ballast: Increase thickness of precast concrete sections or add concrete to base section, as required to prevent flotation.
   4. Base Section: 6-inch minimum thickness for floor slab and 4-inch minimum thickness for walls and base riser section; with separate base slab or base section with integral floor.
   5. Riser Sections: 4-inch minimum thickness, of length to provide depth indicated.
   6. Top Section: Eccentric-cone.
   7. Joint Sealant: ASTM C 990 , bitumen or butyl rubber.
   8. Resilient Pipe Connectors: ASTM C 923, cast or fitted into manhole walls, for each pipe connection. Resilient Pipe Connector to be Kor-N-Seal or approved equal.
   9. Steps: Individual FRP steps or FRP ladder; wide enough to allow worker to place both feet on one step and designed to prevent lateral slippage off step, minimum 10-inches wide. Cast or anchor steps into sidewalls at 12- to 16-inch intervals.
   10. Grade Rings: Reinforced-concrete rings, 6- to 9-inch total thickness, with diameter matching manhole frame and cover, and with height as required to adjust manhole frame and cover to indicated elevation and slope.

B. Manhole Frames and Covers:
   1. Description: Ferrous; 24-inch ID by 7- to 9-inch riser, with 4-inch- minimum-width flange and 26-inch- diameter cover. Include indented top design with lettering cast into cover, using wording equivalent to "SANITARY SEWER."
   2. Material: ASTM A 536, Grade 60-40-18 ductileiron unless otherwise indicated.
   3. Frame and Cover manufacturer make and model required for the City of Brighton is noted in the Standard Details.

2.9 CONCRETE

A. General: Cast-in-place concrete complying with ACI 318, ACI 350/350R, and the following:
   1. Cement: ASTM C 150, Type II.
   2. Fine Aggregate: ASTM C 33, sand.
   3. Coarse Aggregate: ASTM C 33, crushed gravel.
   4. Water: Potable.

B. Portland Cement Design Mix: 4000 psi (minimum, with 0.45 maximum water/cementitious materials ratio.
   1. Reinforcing Fabric: ASTM A 185/A 185M, steel, welded wire fabric, plain.
   2. Reinforcing Bars: ASTM A 615/A 615M, Grade 60 (420 MPa) deformed steel.

C. Manhole Channels and Benches: Factory or field formed from concrete. Portland cement design mix, 4000 psi minimum, with 0.45 maximum water/cementitious materials ratio. Include channels and benches in manholes.
   1. Channels: Concrete invert, formed to same width as connected piping, with height of vertical sides to three-fourths of pipe diameter. Form curved channels with smooth, uniform radius and slope.
      a. Invert Slope: 1 percent through manhole.
   2. Benches: Concrete, sloped to drain into channel.
      a. Slope: 4 percent.

D. Ballast and Pipe Supports: Portland cement design mix, 3000 psi minimum, with 0.58 maximum water/cementitious materials ratio.
   1. Reinforcing Fabric: ASTM A 185/A 185M, steel, welded wire fabric, plain.
   2. Reinforcing Bars: ASTM A 615/A 615M, Grade 60 (420 MPa) deformed steel.

PART 3 - EXECUTION

3.1 EARTHWORK

A. Excavating, trenching, and backfilling are specified in Section 312000 "Earth Moving."

3.2 PIPING INSTALLATION

A. General Locations and Arrangements: Drawing plans and details indicate general location and arrangement of underground sanitary sewer piping. Location and arrangement of piping layout take into account design considerations. Install piping as indicated, to extent practical. Where specific installation is not indicated, follow piping manufacturer's written instructions.

B. Install piping beginning at low point, true to grades and alignment indicated with unbroken continuity of invert. Place bell ends of piping facing upstream. Install gaskets, seals, sleeves, and couplings according to manufacturer's written instructions for using lubricants, cements, and other installation requirements.

C. Install manholes for changes in direction.

D. Install proper size increasers, reducers, and couplings where different sizes or materials of pipes and fittings are connected. Reducing size of piping in direction of flow is prohibited.

E. When installing pipe under streets or other obstructions that cannot be disturbed, use pipe-jacking process of microtunneling.

F. Install gravity-flow, nonpressure, drainage piping according to the following:
   1. Install piping pitched down in direction of flow, at minimum slope of 1 percent unless otherwise indicated.
   2. Install piping NPS 6 and larger with restrained joints at tee fittings and at changes in direction. Use corrosion-resistant rods, pipe or fitting manufacturer's proprietary restraint system, or cast-in-place-concrete supports or anchors.
   3. Install piping with 66 inch minimum cover.
   4. Install ductile-iron, gravity sewer piping according to ASTM A 746.
   5. Install ABS sewer piping according to ASTM D 2321 and ASTM F 1668.
   6. Install PVC Type PSM sewer piping according to ASTM D 2321 and ASTM F 1668.
   7. Install PVC gravity sewer piping according to ASTM D 2321 and ASTM F 1668.

G. Clear interior of piping and manholes of dirt and superfluous material as work progresses. Maintain swab or drag in piping, and pull past each joint as it is completed. Place plug in end of incomplete piping at end of day and when work stops.

3.3 PIPE JOINT CONSTRUCTION

A. Join gravity-flow, nonpressure, drainage piping according to the following:
   1. Join ductile-iron, gravity sewer piping according to AWWA C600 for push-on joints.
   2. Join ABS sewer piping according to ASTM D 2321 and ASTM D 2751 for elastomeric-seal joints.
   3. Join PVC Type PSM sewer piping according to ASTM D 2321 and ASTM D 3034 for elastomeric-seal joints or ASTM D 3034 for elastomeric-gasket joints.
   4. Join PVC gravity sewer piping according to ASTM D 2321 and ASTM D 3034 for elastomeric-seal joints or ASTM D 3034 for elastomeric-gasket joints.
   5. Join dissimilar pipe materials with nonpressure-type, flexible couplings.

B. Pipe couplings, expansion joints, and deflection fittings with pressure ratings at least equal to piping rating may be used in applications below unless otherwise indicated.
   1. Use nonpressure flexible couplings where required to join gravity-flow, nonpressure sewer piping unless otherwise indicated.
      a. Ring-type flexible couplings for piping of different sizes where annular space between smaller piping's OD and larger piping's ID permits installation.

3.4 MANHOLE INSTALLATION

A. General: Install manholes complete with appurtenances and accessories indicated.

B. Install precast concrete manhole sections with sealants according to ASTM C 891.

C. Form continuous concrete channels and benches between inlets and outlet.

D. Set tops of frames and covers flush with finished surface of manholes that occur in pavements. Set tops 3 inches above finished surface elsewhere unless otherwise indicated.

3.5 CONCRETE PLACEMENT

A. Place cast-in-place concrete according to ACI 318.

3.6 CLEANOUT INSTALLATION

A. Install cleanouts and riser extensions from sewer pipes to cleanouts at grade. Use cast-iron soil pipe fittings in sewer pipes at branches for cleanouts, and use cast-iron soil pipe for riser extensions to cleanouts. Install piping so cleanouts open in direction of flow in sewer pipe.

B. Set cleanout frames and covers in earth in cast-in-place-concrete block as shown in the City of Brighton Standard Details,.

C. Set cleanout frames and covers in concrete pavement and roads with tops flush with pavement surface.

3.7 CONNECTIONS

A. Make connections to existing piping and underground manholes.
   1. Use commercially manufactured wye fittings for piping branch connections. Remove section of existing pipe, install wye fitting into existing piping, and encase entire wye fitting plus 6-inch overlap with not less than 6 inches of concrete with 28-day compressive strength of 3000 psi.
   2. Make branch connections from side into existing piping, NPS 4 to NPS 20. Remove section of existing pipe, install wye fitting into existing piping, and encase entire wye with not less than 6 inches of concrete with 28-day compressive strength of 3000 psi.
   3. Make branch connections from side into existing piping, NPS 21 or larger, or to underground manholes by cutting opening into existing unit large enough to allow 3 inches of concrete to be packed around entering connection. Cut end of connection pipe passing through pipe or structure wall to conform to shape of and be flush with inside wall unless otherwise indicated. On outside of pipe or manhole wall, encase entering connection in 6 inches of concrete for minimum length of 12 inches to provide additional support of collar from connection to undisturbed ground.
      a. Use concrete that will attain a minimum 28-day compressive strength of 3000 psi unless otherwise indicated.
      b. Use epoxy-bonding compound as interface between new and existing concrete and piping materials.
   4. Protect existing piping and manholes to prevent concrete or debris from entering while making tap connections. Remove debris or other extraneous material that may accumulate.

3.8 CLOSING ABANDONED SANITARY SEWER SYSTEMS

A. Abandoned Piping: Close open ends of abandoned underground piping indicated to remain in place. Include closures strong enough to withstand hydrostatic and earth pressures that may result after ends of abandoned piping have been closed. Use either procedure below:
   1. Close open ends of piping with at least 8-inch thick, brick masonry bulkheads.
   2. Close open ends of piping with threaded metal caps, plastic plugs, or other acceptable methods suitable for size and type of material being closed. Do not use wood plugs.

B. Abandoned Manholes: Excavate around manhole as required and use either procedure below:
   1. Remove manhole and close open ends of remaining piping.
   2. Remove top of manhole down to at least 36 inches below final grade. Fill to within 12 inches of top with stone, rubble, gravel, or compacted dirt. Fill to top with concrete.

C. Backfill to grade according to Section 312000 "Earth Moving."

3.9 IDENTIFICATION

A. Comply with requirements in Section 31200 "Earth Moving" for underground utility identification devices. Arrange for installation of green warning tapes directly over piping and at outside edges of underground manholes.
   1. Use warning tape or detectable warning tape over ferrous piping.
   2. Use detectable warning tape over nonferrous piping and over edges of underground manholes.

3.10 FIELD QUALITY CONTROL

A. Inspect interior of piping to determine whether line displacement or other damage has occurred. Inspect after approximately 24 inches of backfill is in place, and again at completion of Project.
   1. Submit separate report for each system inspection.
   2. Defects requiring correction include the following:
      a. Alignment: Less than full diameter of inside of pipe is visible between structures.
      b. Deflection: Flexible piping with deflection that prevents passage of ball or cylinder of size not less than 92.5 percent of piping diameter.
      c. Damage: Crushed, broken, cracked, or otherwise damaged piping.
      d. Infiltration: Water leakage into piping.
      e. Exfiltration: Water leakage from or around piping.
   3. Replace defective piping using new materials, and repeat inspections until defects are within allowances specified.
   4. Reinspect and repeat procedure until results are satisfactory.

B. Test new piping systems, and parts of existing systems that have been altered, extended, or repaired, for leaks and defects.
   1. Do not enclose, cover, or put into service before inspection and approval.
   2. Schedule tests and inspections with the City of Brighton with at least 24 hours' advance notice.
   3. Submit separate report for each test.

C. Hydrostatic Test (Gravity Sewer except HDPE): Test sanitary sewerage according to requirements of authorities having jurisdiction and the following:
      a. Fill sewer piping with water. Test with pressure of at least 10-foot head of water, and maintain such pressure without leakage for at least 15 minutes.
      b. Close openings in system and fill with water.
      c. Purge air and refill with water.
      d. Disconnect water supply.
      e. Test and inspect joints for leaks.

D. Hydrostatic Testing (Pressure Pipe except HDPE): The section of pipe to be tested shall be filled with water, the entrained air within the line shall be removed, and water shall be pressurized up to test pressure at the pipe low point within 5 to 10 minutes.

a. The test period shall start immediately after initial pressurization. The line shall be maintained under the test pressure for a continuous 2-hour period.

b. The section of pipe to be tested shall hold the test pressure with no more than a 5 percent loss in pressure over the test period or the leakage per hour under the conditions of test shall not exceed values determined by the following equation:

$$L = \frac{SD\sqrt{P}}{148{,}000}$$

where L = allowable leakage per hour (gallons)
S = length of pipe in test (feet)
D = nominal diameter of pipe (inches)
P = average test pressure (psi, gauge)

c. Piping with flanged, grooved coupling, screwed, socket type, and welded joints shall be completely tight at the designated test pressure.

d. The test pressure shall not vary by more than 5 psi throughout the entire test period.

e. Test Pressures: Pipelines shall be tested at 1-1/2 times their working pressure.

E. Hydrostatic Test (HDPE Pipe): The section of pipe to be tested shall be filled with water, the entrained air within the line shall be removed, and water shall be pressurized up to test pressure at the pipe low point within 5 to 10 minutes. To compensate for expansion after initial pressurization, sufficient make-up water shall be added into the pipe system at hourly intervals for 3 hours to raise the pressure back up to the test pressure.

1. After completion of this initial phase, approximately 4 hours after start of the testing procedure, the actual test shall begin.
2. The system shall be pressurized up to the test pressure and by make-up water held continuously at the test pressure for at least 1 hour, but no more than 3 hours.
3. The make-up water used during the test shall be measured and shall not exceed the allowance given in the following table.

ALLOWANCE FOR EXPANSION OF HDPE PIPE UNDER TEST PRESSURE

Allowance for Expansion
(U.S. Gallons per 100 Feet of Pipe)

Nominal Pipe Size (In.)	1-Hour Test	2-Hour Test	3-Hour Test
3	0.10	0.15	0.25
4	0.13	0.25	0.40
6	0.30	0.60	0.90
8	0.50	1.0	1.5
10	0.75	1.3	2.1
11	1.0	2.0	3.0
12	1.1	2.3	3.4
14	1.4	2.8	4.2
16	1.7	3.3	5.0
18	2.2	4.3	6.5
20	2.8	5.5	8.0
22	3.5	7.0	10.5
24	4.5	11.1	16.8
28	5.5	11.1	16.8
32	7.0	14.3	21.5
36	9.0	18.0	27.0
40	11.0	22.0	33.0
48	15.0	27.0	43.0
54	22.0	35.0	55.0

4. If there are no visible leaks or pressure drops greater than 5 psi during the actual test period, the system passes the test. If leakage is revealed, however, the defect shall be corrected and a retest shall be made after a 24-hour minimum depressurized recuperation period.

F. Air Tests: Test sanitary sewerage according to requirements of authorities having jurisdiction, UNI-B-6, and the following:
   1. Option: Test plastic gravity sewer piping according to ASTM F 1417.
   2. Option: Test concrete gravity sewer piping according to ASTM C 924.

G. Manholes: Perform hydraulic test according to ASTM C 969.

H. Leaks and loss in test pressure constitute defects that must be repaired.

I. Replace leaking piping using new materials, and repeat testing until leakage is within allowances specified.

3.11 CLEANING

A. Clean dirt and superfluous material from interior of piping.

END OF SECTION 221313

SECTION 311000 - SITE CLEARING

PART 1 - GENERAL

1.1 SUMMARY

A. Section Includes:
1. Protecting existing vegetation to remain.
2. Removing existing vegetation.
3. Clearing and grubbing.
4. Stripping and stockpiling topsoil.
5. Stripping and stockpiling rock.
6. Removing above- and below-grade site improvements.
7. Disconnecting, capping or sealing and removing site utilities or abandoning site utilities in place.
8. Temporary erosion and sedimentation control.

1.2 DEFINITIONS

A. Subsoil: Soil beneath the level of subgrade; soil beneath the topsoil layers of a naturally occurring soil profile, typified by less than 1 percent organic matter and few soil organisms.

B. Surface Soil: Soil that is present at the top layer of the existing soil profile. In undisturbed areas, surface soil is typically called "topsoil," but in disturbed areas such as urban environments, the surface soil can be subsoil.

C. Topsoil: Top layer of the soil profile consisting of existing native surface topsoil or existing in-place surface soil; the zone where plant roots grow. Its appearance is generally friable, pervious, and black or a darker shade of brown, gray, or red than underlying subsoil; reasonably free of subsoil, clay lumps, gravel, and other objects larger than 2 inches in diameter; and free of weeds, roots, toxic materials, or other nonsoil materials.

D. Tree-Protection Zone: Area surrounding individual trees or groups of trees to be protected during construction.

E. Vegetation: Trees, shrubs, groundcovers, grass, and other plants.

1.3 MATERIAL OWNERSHIP

A. Except for materials indicated to be stockpiled or otherwise remain Owner's property, cleared materials shall become Contractor's property and shall be removed from Project site.

1.4 FIELD CONDITIONS

A. Traffic: Minimize interference with adjoining roads, streets, walks, and other adjacent occupied or used facilities during site-clearing operations.
1. Do not close or obstruct streets, walks, or other adjacent occupied or used facilities without permission from Owner and authorities having jurisdiction.

2. Provide alternate routes around closed or obstructed traffic ways if required by the City of Brighton.

B. Salvageable Improvements: Carefully remove items indicated to be salvaged and store on Owner's premises where indicated.

C. Utility Locator Service: Notify Miss Dig for area where Project is located before site clearing.

D. Do not commence site clearing operations until temporary erosion- and sedimentation-control measures are in place.

E. Soil Stripping, Handling, and Stockpiling: Perform only when the soil is dry or slightly moist.

PART 2 - PRODUCTS

2.1 MATERIALS

A. Satisfactory Soil Material: Requirements for satisfactory soil material are specified in Michigan Department of Transportation (MDOT) Specifications."

1. Obtain approved borrow soil material off-site when satisfactory soil material is not available on-site.

PART 3 - EXECUTION

3.1 PREPARATION

A. Protect and maintain benchmarks and survey control points from disturbance during construction.

B. Protect existing site improvements to remain from damage during construction.

1. Restore damaged improvements to their original condition, as acceptable to the City of Brighton.

3.2 TEMPORARY EROSION AND SEDIMENTATION CONTROL

A. Provide temporary erosion- and sedimentation-control measures to prevent soil erosion and discharge of soil-bearing water runoff or airborne dust to adjacent properties and walkways, according to erosion- and sedimentation-control Drawings and requirements of authorities having jurisdiction.

B. Inspect, maintain, and repair erosion- and sedimentation-control measures during construction until permanent vegetation has been established.

C. Remove erosion and sedimentation controls, and restore and stabilize areas disturbed during removal.

3.3 EXISTING UTILITIES

A. Locate, identify, disconnect, and seal or cap utilities indicated to be removed or abandoned in place.
   1. Arrange with utility companies to shut off indicated utilities.

B. Locate, identify, and disconnect utilities indicated to be abandoned in place.

C. Interrupting Existing Utilities: Do not interrupt utilities serving facilities occupied by the City of Brighton or others, unless permitted under the following conditions and then only after arranging to provide temporary utility services according to requirements indicated:
   1. Notify City of Brighton not less than five (5) days, unless otherwise approved, in advance of proposed utility interruptions.
   2. Do not proceed with utility interruptions without City of Brighton's written permission.

D. Excavate for and remove underground utilities indicated to be removed.

3.4 CLEARING AND GRUBBING

A. Remove obstructions, trees, shrubs, and other vegetation to permit installation of new construction.
   1. Do not remove trees, shrubs, and other vegetation indicated to remain or to be relocated.
   2. Grind down stumps and remove roots larger than 2 inches in diameter, obstructions, and debris to a depth of 18 inches below exposed subgrade.
   3. Use only hand methods or air spade for grubbing within protection zones.
   4. Chip removed tree branches and stockpile in areas approved by the City of Brighton or dispose of off-site.

B. Fill depressions caused by clearing and grubbing operations with satisfactory soil material unless further excavation or earthwork is indicated.
   1. Place fill material in horizontal layers not exceeding a loose depth of 8 inches, and compact each layer to a density equal to adjacent original ground.

3.5 TOPSOIL STRIPPING

A. Remove sod and grass before stripping topsoil.

B. Strip topsoil to depth of 6 inches in a manner to prevent intermingling with underlying subsoil or other waste materials.

C. Stockpile topsoil away from edge of excavations without intermixing with subsoil or other materials. Grade and shape stockpiles to drain surface water. Cover to prevent windblown dust and erosion by water.
   1. Limit height of topsoil stockpiles to 72 inches .
   2. Do not stockpile topsoil within protection zones.
   3. Dispose of surplus topsoil. Surplus topsoil is that which exceeds quantity indicated to be stockpiled or reused.

3.6 SITE IMPROVEMENTS

A. Remove existing above- and below-grade improvements as indicated and necessary to facilitate new construction.

B. Remove slabs, paving, curbs, gutters, and aggregate base as indicated.
   1. Unless existing full-depth joints coincide with line of demolition, neatly saw-cut along line of existing pavement to remain before removing adjacent existing pavement. Saw-cut faces vertically.
   2. Paint cut ends of steel reinforcement in concrete to remain with two coats of antirust coating, following coating manufacturer's written instructions. Keep paint off surfaces that will remain exposed.

3.7 DISPOSAL OF SURPLUS AND WASTE MATERIALS

A. Remove surplus soil material, unsuitable topsoil, obstructions, demolished materials, and waste materials including trash and debris, and legally dispose of them off the City of Brighton's property.

END OF SECTION 311000

SECTION 312000 - EARTH MOVING

PART 1 - GENERAL

1.1 SUMMARY

A. Section Includes:
1. Preparing subgrades for slabs-on-grade, walks, pavements, turf and grasses.
2. Drainage course for concrete slabs-on-grade.
3. Subbase course for concrete walks and pavements.
4. Subbase course and base course for asphalt paving.
5. Excavating and backfilling for utility trenches.

1.2 SUBMITTALS

A. Test and Inspection Reports: Written reports shall be submitted to Engineer, with copy to CONTRACTOR, documenting testing and/or inspection results. Tests shall include:
1. Test reports on borrow material.
2. Gradation analysis for granular backfill and subbase materials.
3. Field reports; in-place soil density tests will be performed by a representative of OWNER.

1.3 QUALITY ASSURANCE

A. Codes and Standards: Perform excavation work in compliance with applicable requirements of authorities having jurisdiction. Construct subbase in accordance MDOT Standard Specifications for Construction.

B. Testing and Inspection Service: Owner will employ and pay for a qualified independent geotechnical testing and inspection laboratory to perform soil testing and inspection service during earthwork operations.

1.4 DEFINITIONS

A. Backfill: Soil material used to fill an excavation.
1. Initial Backfill: Backfill placed beside and over pipe in a trench, including haunches to support sides of pipe.
2. Final Backfill: Backfill placed over initial backfill to fill a trench.

B. Base Course: Aggregate layer placed between the subbase course and hot-mix asphalt paving.

C. Bedding Course: Aggregate layer placed over the excavated subgrade in a trench before laying pipe.

D. Borrow Soil: Satisfactory soil imported from off-site for use as fill or backfill.

E. Drainage Course: Aggregate layer supporting the slab-on-grade that also minimizes upward capillary flow of pore water.

F. Excavation: Removal of material encountered above subgrade elevations and to lines and dimensions indicated in drawings.

G. Fill: Soil materials used to raise existing grades.

H. Subbase Course: Aggregate layer placed between the subgrade and base course for hot-mix asphalt pavement, or aggregate layer placed between the subgrade and a cement concrete pavement or a cement concrete or hot-mix asphalt walk.

I. Subgrade: Uppermost surface of an excavation or the top surface of a fill or backfill immediately below subbase, drainage fill, drainage course, or topsoil materials.

J. Utilities: On-site underground pipes, conduits, ducts, and cables, as well as underground services within buildings.

1.5 PROJECT CONDITIONS

A. Groundwater is anticipated to be encountered during excavation. Dewatering requirements are specified in Section 312319 “Dewatering”.

B. Existing Utilities: Locate existing underground utilities in areas of excavation work. If utilities are indicated to remain in place, provide adequate means of support and protection during earthwork operations.

C. CONTRACTOR shall notify MISS-DIG, Utility Communications System, three working days prior to starting any excavation with power equipment.
   1. Should uncharted, or incorrectly charted, piping or other utilities be encountered during excavation, consult utility Owner immediately for directions. Cooperate with Owner and utility companies in keeping respective services and facilities in operation. Repair damaged utilities to satisfaction of utility Owner.
   2. Do not interrupt existing utilities serving facilities occupied by Owner or others during occupied hours except when permitted in writing by Engineer, and then only after acceptable temporary utility services have been provided.
   3. Provide minimum of 2 working days notice to Engineer and receive written notice to proceed before interrupting any utility.
   4. Demolish and completely remove from Site existing underground utilities indicated to be removed. Coordinate with utility companies for shutoff of services if lines are active.

D. Protection of Persons and Property: Barricade open excavations occurring as part of this Work and post with warning lights.
   1. Operate warning lights as recommended by authorities having jurisdiction.
   2. Protect structures, utilities, sidewalks, pavements, and other facilities from damage caused by settlement, lateral movement, undermining, washout, and other hazards created by earthwork operations.
   3. Perform excavation by hand within drip line of large trees to remain. Protect root systems from damage or dryout to the greatest extent possible. Maintain moist condition for root system and cover exposed roots with moistened burlap.

PART 2 - PRODUCTS

2.1 SOIL MATERIALS

A. General: Provide borrow soil materials when sufficient satisfactory soil materials are not available from excavations. Contractor shall provide verification that materials brought on site for use as fill are environmentally clan and free of known contaminants.

B. Satisfactory Soils: Soil Classification Groups GW, GP, GM, SW, SP, and SM according to ASTM D 2487, or a combination of these groups; free of rock or gravel larger than 3 inches in any dimension, debris, waste, frozen materials, vegetation, and other deleterious matter.
   1. Liquid Limit: Shall not exceed 35 percent when tested in accordance with ASTM D 4318.
   2. Plasticity Index: Shall not be greater than 12 percent when tested in accordance with ASTM D 4318, and not more than 35 percent by weight shall be finer than No. 200 sieve when tested in accordance with ASTM D 1140.

C. Unsatisfactory Soils: Soil Classification Groups GC, SC, CL, ML, OL, CH, MH, OH, and PT according to ASTM D 2487, or a combination of these groups.
   1. Unsatisfactory soils also include satisfactory soils not maintained within 2 percent of optimum moisture content at time of compaction.
   2. Materials which do not comply with the requirements for satisfactory materials are unsatisfactory. Unsatisfactory materials also include ma-made fills; trash; refuse; backfills from previous construction; and material classified as satisfactory which contains root and other organic matter or frozen material.
   3. The City shall be notified of any contaminated materials.

D. Subbase Material: Naturally or artificially graded mixture of natural or crushed gravel, crushed stone, and natural or crushed sand; ASTM D 2940; with at least 90 percent passing a 1-1/2-inch sieve and not more than 12 percent passing a No. 200 sieve.
   1. MDOT Specifications - Granular Materials Class II is acceptable.

E. Granular Fill: Granular fill shall be defined as sharp sand, gravel, or crushed stone, free from lumps of clay, soft or flaky material.
   1. Shall conform to MDOT Specification, "Granular Materials - Class III."

F. Base Course: Naturally or artificially graded mixture of natural or crushed gravel, crushed stone, and natural or crushed sand; ASTM D 2940; with at least 95 percent passing a 1-1/2-inch sieve and not more than 8 percent passing a No. 200 sieve.

G. Engineered Fill: Naturally or artificially graded mixture of natural or crushed gravel, crushed stone, and natural or crushed sand; ASTM D 2940; with at least 90 percent passing a 1-1/2-inch sieve and not more than 12 percent passing a No. 200 sieve.

H. Bedding Course: Naturally or artificially graded mixture of natural or crushed gravel, crushed stone, and natural or crushed sand; ASTM D 2940; except with 100 percent passing a 1-inch sieve and not more than 8 percent passing a No. 200 sieve.
   1. MDOT Specification Granular Material 6A or Class I, except 100 percent must pass 1 1/2 inch sieve.
   2. Bedding for Thermoplastic Pipe, 6-inch Diameter or Less: Granular material with 100 percent passing the 1/2-inch sieve and less than 50 percent passing the No. 200 sieve.

I. Stone Refill: MDOT 6A Coarse Aggregate.

J. Drainage Course: Narrowly graded mixture of crushed stone, or crushed or uncrushed gravel; ASTM D 448; coarse-aggregate grading Size 57; with 100 percent passing a 1-1/2-inch sieve and 0 to 5 percent passing a No. 8 sieve.

2.2 ACCESSORIES

A. Warning Tape (for Metallic Piping): Acid- and alkali-resistant, polyethylene film warning tape manufactured for marking and identifying underground utilities, 6 inches wide and 4

mils thick, continuously inscribed with a description of the utility; colored to comply with local practice or requirements of the City of Brighton.

B. Detectable Warning Tape (for Non-Metallic Piping): Acid- and alkali-resistant, polyethylene film warning tape manufactured for marking and identifying underground utilities, a minimum of 6 inches wide and 4 mils thick, continuously inscribed with a description of the utility, with metallic core encased in a protective jacket for corrosion protection, detectable by metal detector when tape is buried up to 30 inches deep; colored to comply with local practice or requirements of the City of Brighton.

PART 3 - EXECUTION

3.1 PREPARATION

A. Protect utilities, sidewalks, pavements, and other facilities from damage caused by settlement, lateral movement, undermining, washout, and other hazards created by earth moving operations.

B. Protect and maintain erosion and sedimentation controls during earth moving operations.

C. Protect subgrades from freezing temperatures and frost. Remove temporary protection before placing subsequent materials.

3.2 EXCAVATION, GENERAL

A. Unclassified Excavation: Excavate to subgrade elevations regardless of the character of surface and subsurface conditions encountered. Unclassified excavated materials may include rock, soil materials, and obstructions.

1. If excavated materials intended for fill and backfill include unsatisfactory soil materials and rock, replace with satisfactory soil materials.

3.3 EXCAVATION FOR WALKS AND PAVEMENTS

A. Excavate surfaces under walks and pavements to indicated lines, cross sections, elevations, and subgrades.

3.4 EXCAVATION FOR UTILITY TRENCHES

A. Excavate trenches to indicated gradients, lines, depths, and elevations.

B. Excavate trenches to uniform widths to provide the following clearance on each side of pipe or conduit. Excavate trench walls vertically from trench bottom to 12 inches higher than top of pipe or conduit unless otherwise indicated.

1. Clearance: 12 inches each side of pipe.

C. Trench Bottoms: Excavate and shape trench bottoms to provide uniform bearing and support of pipes and conduit. Shape subgrade to provide continuous support for bells, joints, and barrels of pipes and for joints, fittings, and bodies of conduits. Remove projecting stones and sharp objects along trench subgrade.

1. Excavate trenches 6 inches deeper than elevation required in rock or other unyielding bearing material, 4 inches deeper elsewhere, to allow for bedding course.

D. Trenches in Tree- and Plant-Protection Zones:

1. Hand-excavate to indicated lines, cross sections, elevations, and subgrades. Use narrow-tine spading forks to comb soil and expose roots. Do not break, tear, or chop exposed roots. Do not use mechanical equipment that rips, tears, or pulls roots.
2. Do not cut main lateral roots or taproots; cut only smaller roots that interfere with installation of utilities.
3. Cut and protect roots according to requirements in Section 015639 "Temporary Tree and Plant Protection."

3.5 SUBGRADE INSPECTION

A. Proof-roll subgrade below the building slabs and pavements with a pneumatic-tired dump truck to identify soft pockets and areas of excess yielding. Do not proof-roll wet or saturated subgrades.

B. Reconstruct subgrades damaged by freezing temperatures, frost, rain, accumulated water, or construction activities.

3.6 STORAGE OF SOIL MATERIALS

A. Stockpile borrow soil materials and excavated satisfactory soil materials without intermixing. Place, grade, and shape stockpiles to drain surface water. Cover to prevent windblown dust.
1. Stockpile soil materials away from edge of excavations. Do not store within drip line of remaining trees.

3.7 UTILITY TRENCH BACKFILL

A. Place backfill on subgrades free of mud, frost, snow, or ice.

B. Place and compact bedding course on trench bottoms and where indicated. Shape bedding course to provide continuous support for bells, joints, and barrels of pipes and for joints, fittings, and bodies of conduits.

C. Trenches under Roadways: Provide 4-inch thick, concrete-base slab support for piping or conduit less than 30 inches below surface of roadways. After installing and testing, completely encase piping or conduit in a minimum of 4 inches of concrete before backfilling or placing roadway subbase course. Concrete is specified in "Miscellaneous Cast-in-Place Concrete".

D. Place and compact initial backfill of subbase material, free of particles larger than 1 inch in any dimension, to a height of 12 inches over the pipe or conduit.
1. Carefully compact initial backfill under pipe haunches and compact evenly up on both sides and along the full length of piping or conduit to avoid damage or displacement of piping or conduit. Coordinate backfilling with utilities testing.

E. Place and compact final backfill of satisfactory soil to final subgrade elevation.

F. Install warning tape directly above utilities, 12 inches below finished grade, except 6 inches below subgrade under pavements and slabs.

3.8 SOIL FILL

A. Plow, scarify, bench, or break up sloped surfaces steeper than 1 vertical to 4 horizontal so fill material will bond with existing material.

B. Place and compact fill material in layers to required elevations as follows:
1. Under grass and planted areas, use satisfactory soil material.

2. Under walks and pavements, use satisfactory soil material.

3.9 SOIL MOISTURE CONTROL

A. Uniformly moisten or aerate subgrade and each subsequent fill or backfill soil layer before compaction to within 2 percent of optimum moisture content.
   1. Do not place backfill or fill soil material on surfaces that are muddy, frozen, or contain frost or ice.
   2. Remove and replace, or scarify and air dry, otherwise satisfactory soil material that exceeds optimum moisture content by 2 percent and is too wet to compact to specified dry unit weight.

3.10 COMPACTION OF SOIL BACKFILLS AND FILLS

A. Place backfill and fill soil materials in layers not more than 8 inches in loose depth for material compacted by heavy compaction equipment, and not more than 4 inches in loose depth for material compacted by hand-operated tampers.

B. Place backfill and fill soil materials evenly on all sides of structures to required elevations, and uniformly along the full length of each structure.

C. Compact soil materials to not less than the following percentages of maximum dry unit weight according to ASTM D 1557:
   1. Under pavements, scarify and recompact top 12 inches of existing subgrade and each layer of backfill or fill soil material at 95 percent.
   2. Under walkways, scarify and recompact top 6 inches below subgrade and compact each layer of backfill or fill soil material at 95 percent.
   3. Under turf or unpaved areas, scarify and recompact top 6 inches below subgrade and compact each layer of backfill or fill soil material at 90 percent.

3.11 GRADING

A. General: Uniformly grade areas to a smooth surface, free of irregular surface changes. Comply with compaction requirements and grade to cross sections, lines, and elevations indicated.

B. Site Rough Grading: Slope grades to direct water away from buildings and to prevent ponding. Finish subgrades to required elevations within the following tolerances:
   1. Turf or Unpaved Areas: Plus or minus 1 inch.
   2. Walks: Plus or minus 1 inch.
   3. Pavements: Plus or minus 1/2 inch.

C. Grading inside Building Lines: Finish subgrade to a tolerance of 1/2 inch when tested with a 10-foot straightedge.

3.12 SUBBASE AND BASE COURSES UNDER PAVEMENTS AND WALKS

A. Place subbase course and base course on subgrades free of mud, frost, snow, or ice.

B. On prepared subgrade, place subbase course and base course under pavements and walks as follows:
   1. Shape subbase course and base course to required crown elevations and cross-slope grades.
   2. Place subbase course and base course that exceeds 6 inches in compacted thickness in layers of equal thickness, with no compacted layer more than 6 inches thick or less than 3 inches thick.

3. Compact subbase course and base course at optimum moisture content to required grades, lines, cross sections, and thickness to not less than 95 percent of maximum dry unit weight according to ASTM D 1557.

3.13 DRAINAGE COURSE UNDER CONCRETE SLABS-ON-GRADE

A. Place drainage course on subgrades free of mud, frost, snow, or ice.

B. On prepared subgrade, place and compact drainage course under cast-in-place concrete slabs-on-grade as follows:
   1. Place drainage course that exceeds 6 inches in compacted thickness in layers of equal thickness, with no compacted layer more than 6 inches thick or less than 3 inches thick.
   2. Compact each layer of drainage course to required cross sections and thicknesses to not less than 95 percent of maximum dry unit weight according to ASTM D 698.

3.14 FIELD QUALITY CONTROL

A. Testing Agency: Contractor will engage a qualified geotechnical engineering testing agency to perform tests and inspections.

B. Allow testing agency to inspect and test subgrades and each fill or backfill layer. Proceed with subsequent earth moving only after test results for previously completed work comply with requirements.

C. Footing Subgrade: At footing subgrades, at least one test of each soil stratum will be performed to verify design bearing capacities. Subsequent verification and approval of other footing subgrades may be based on a visual comparison of subgrade with tested subgrade when approved by City.

D. When testing agency reports that subgrades, fills, or backfills have not achieved degree of compaction specified, scarify and moisten or aerate, or remove and replace soil materials to depth required; recompact and retest until specified compaction is obtained.

3.15 PROTECTION

A. Protecting Graded Areas: Protect newly graded areas from traffic, freezing, and erosion. Keep free of trash and debris.

B. Repair and reestablish grades to specified tolerances where completed or partially completed surfaces become eroded, rutted, settled, or where they lose compaction due to subsequent construction operations or weather conditions.

C. Where settling occurs before Project correction period elapses, remove finished surfacing, backfill with additional soil material, compact, and reconstruct surfacing.
   1. Restore appearance, quality, and condition of finished surfacing to match adjacent work, and eliminate evidence of restoration to greatest extent possible.

3.16 DISPOSAL OF SURPLUS AND WASTE MATERIALS

A. Remove surplus satisfactory soil and waste materials, including unsatisfactory soil, trash, and debris, and legally dispose of them off City property.

END OF SECTION 312000

SECTION 312319 - DEWATERING

PART 1 - GENERAL

1.1 SUMMARY

A. Section includes construction dewatering.

PART 2 - PRODUCTS

2.1 PERFORMANCE REQUIREMENTS

A. Dewatering Performance: Design, furnish, install, test, operate, monitor, and maintain dewatering system of sufficient scope, size, and capacity to control hydrostatic pressures and to lower, control, remove, and dispose of ground water and permit excavation and construction to proceed on dry, stable subgrades.

B. Contractor shall reduce hydrostatic head in the water-bearing strata below structure foundations, drains, sewers and other excavations to extent that water level and piezometric water levels in construction areas are below prevailing excavation surface.

PART 3 - EXECUTION

3.1 PREPARATION

A. Provide temporary grading to facilitate dewatering and control of surface water.

B. Protect and maintain temporary erosion and sedimentation controls, which are specified in Section 311000 "Site Clearing," during dewatering operations.

C. Contractor shall, prior to excavation below groundwater level, place system into operation to lower water levels as required and then operate it continuously 24 hour a day, 7 days a week until drains, sewers and structures have been constructed, including placement of fill materials, and until dewatering is no longer needed.

D. Contractor shall dispose of water removed from excavations in a manner to avoid endangering public health, property, and portions of the work under construction or completed, including work being performed by adjacent project(s). Dispose of water in a manner to avoid inconvenience to others engaged on the site, including work being performed by adjacent project(s). Provide sumps, sedimentation tanks, and other flow control devices as necessary. Effluent water from dewatering methods shall be sediment free or be discharged through an sediment entrapment basin approved by the contracting officer.

E. Contractor shall provide standby equipment on site, installed and available, for immediate operation if required to maintain dewatering on a continuous basis in event any part of the system becomes inadequate or fails. If dewatering requirements are not satisfied due to

inadequacy of failure of dewatering system, perform work as may be required to restore damaged structures and foundations soils at no additional expense.

3.2 INSTALLATION

A. Install dewatering system utilizing wells, well points, or similar methods complete with pump equipment, standby power and pumps, filter material gradation, valves, appurtenances, water disposal, and surface-water controls.
   1. Space well points or wells at intervals required to provide sufficient dewatering.
   2. Use filters or other means to prevent pumping of fine sands or silts from the subsurface.

B. Place dewatering system into operation to lower water to specified levels before excavating below ground-water level.

C. Provide standby equipment on-site, installed and available for immediate operation, to maintain dewatering on continuous basis if any part of system becomes inadequate or fails.

3.3 OPERATION

A. Operate system continuously until drains, sewers, and structures have been constructed and fill materials have been placed or until dewatering is no longer required.

B. Operate system to lower and control ground water to permit excavation, construction of structures, and placement of fill materials on dry subgrades. Drain water-bearing strata above and below bottom of foundations, drains, sewers, and other excavations.
   1. Do not permit open-sump pumping that leads to loss of fines, soil piping, subgrade softening, and slope instability.
   2. Reduce hydrostatic head in water-bearing strata below subgrade elevations of foundations, drains, sewers, and other excavations.
   3. Maintain piezometric water level a minimum of 24 inches below bottom of excavation.

C. Remove dewatering system from Project site on completion of dewatering. Plug or fill well holes with sand or cut off and cap wells a minimum of 36 inches below overlying construction.

3.4 FIELD QUALITY CONTROL

A. Survey-Work Benchmarks: Resurvey benchmarks regularly during dewatering and maintain an accurate log of surveyed elevations for comparison with original elevations. Promptly notify Engineer if changes in elevations occur or if cracks, sags, or other damage is evident in adjacent construction.

END OF SECTION 312319

SECTION 321216 - ASPHALT PAVING

PART 1 - GENERAL

1.1 SUMMARY

A. Section Includes:
1. Hot-mix asphalt paving.

B. Related Requirements:
1. Section 312000 "Earth Moving" for subgrade preparation, fill material, unbound-aggregate subbase and base courses, and aggregate pavement shoulders.

1.2 ACTION SUBMITTALS

A. Product Data: For each type of product.

1.3 INFORMATIONAL SUBMITTALS

A. Material Certificates: For each paving material.

1.4 QUALITY ASSURANCE

A. Manufacturer Qualifications: A paving-mix manufacturer registered with and approved by authorities having jurisdiction or the Michigan Department of Transportation (MDOT).

B. Regulatory Requirements: Comply with materials, workmanship, and other applicable requirements of the Michigan Department of Transportation (MDOT) for asphalt paving work.
1. Measurement and payment provisions and safety program submittals included in standard specifications do not apply to this Section.

PART 2 - PRODUCTS

2.1 AGGREGATES

A. Coarse Aggregate: ASTM D 692/D 692M, sound; angular crushed stone, crushed gravel, or cured, crushed blast-furnace slag.

B. Fine Aggregate: ASTM D 1073, sharp-edged natural sand or sand prepared from stone, gravel, cured blast-furnace slag, or combinations thereof.

2.2 ASPHALT MATERIALS

A. Asphalt Binder: AASHTO M 320, PG 64-22 for Base and intermediate course and PG 70-22 for surface course.

B. Tack Coat: ASTM D 977 Type AE-T, AE-PMT, SS1h.

2.3 MIXES

A. Hot-Mix Asphalt: Dense-graded, hot-laid, hot-mix asphalt plant mixes meeting MDOT specifications and complying with the following requirements:
   1. Base Course: MDOT 13A.
   2. Surface Course: MDOT 36A.

PART 3 - EXECUTION

3.1 SURFACE PREPARATION

A. General: Immediately before placing asphalt materials, remove loose and deleterious material from substrate surfaces. Ensure that prepared subgrade is ready to receive paving.

B. Proof-roll subgrade below pavements with heavy pneumatic-tired equipment to identify soft pockets and areas of excess yielding. Do not proof-roll wet or saturated subgrades.

C. Tack Coat: Apply uniformly to surfaces of existing pavement at a rate of 0.03 to 0.08 gal./sq. yd.
   1. Allow tack coat to cure undisturbed before applying hot-mix asphalt paving.
   2. Avoid smearing or staining adjoining surfaces, appurtenances, and surroundings. Remove spillages and clean affected surfaces.

3.2 PLACING HOT-MIX ASPHALT

A. Spread mix at a minimum temperature of 300 +/- 9 deg F for dense graded mixtures and 260 +/- 9 deg F for open graded mixtures. Asphalt material shall not be applied on a wet surface, when the ambient temperature is below 50-deg F, or when other unsuitable conditions exist.

B. Regulate paver machine speed to obtain smooth, continuous surface free of pulls and tears in asphalt-paving mat.

C. Place paving in consecutive strips not less than 10 feet wide unless infill edge strips of a lesser width are required.

D. Promptly correct surface irregularities in paving course behind paver. Use suitable hand tools to remove excess material forming high spots. Fill depressions with hot-mix asphalt to prevent segregation of mix; use suitable hand tools to smooth surface.

3.3 JOINTS

A. Construct joints to ensure a continuous bond between adjoining paving sections. Construct joints free of depressions, with same texture and smoothness as other sections of hot-mix asphalt course.
   1. Clean contact surfaces and apply tack coat to joints.
   2. Offset longitudinal joints, in successive courses, a minimum of 6 inches.
   3. Offset transverse joints, in successive courses, a minimum of 24 inches.
   4. Construct transverse joints at each point where paver ends a day's work and resumes work at a subsequent time. Construct these joints using either "bulkhead" or "papered"

method according to AI MS-22, for both "Ending a Lane" and "Resumption of Paving Operations."

3.4 COMPACTION

A. General: Begin compaction as soon as placed hot-mix paving will bear roller weight without excessive displacement. Compact hot-mix paving with hot, hand tampers or with vibratory-plate compactors in areas inaccessible to rollers.
   1. Complete compaction before mix temperature cools to 185 deg F.

B. Breakdown Rolling: Complete breakdown or initial rolling immediately after rolling joints and outside edge. Examine surface immediately after breakdown rolling for indicated crown, grade, and smoothness. Correct laydown and rolling operations to comply with requirements.

C. Intermediate Rolling: Begin intermediate rolling immediately after breakdown rolling while hot-mix asphalt is still hot enough to achieve specified density. Continue rolling until hot-mix asphalt course has been uniformly compacted to the following density:
   1. Average Density: 92 percent of reference maximum theoretical density according to ASTM D 2041, but not less than 90 percent or greater than 96 percent.

D. Finish Rolling: Finish roll paved surfaces to remove roller marks while hot-mix asphalt is still warm.

E. Edge Shaping: While surface is being compacted and finished, trim edges of pavement to proper alignment. Bevel edges while asphalt is still hot; compact thoroughly.

F. Protection: After final rolling, do not permit vehicular traffic on pavement until it has cooled and hardened.

G. Erect barricades to protect paving from traffic until mixture has cooled enough not to become marked.

3.5 INSTALLATION TOLERANCES

A. Pavement Thickness: Compact each course to produce the thickness indicated within the following tolerances:
   1. Base Course: Plus or minus 1/2 inch.
   2. Surface Course: Plus 1/4 inch, no minus.

B. Pavement Surface Smoothness: Compact each course to produce a surface smoothness within the following tolerances as determined by using a 10-foot straightedge applied transversely or longitudinally to paved areas:
   1. Base Course: 1/4 inch.
   2. Surface Course: 1/8 inch.

3.6 FIELD QUALITY CONTROL

A. Testing Agency: Contractor will engage a qualified testing agency to perform tests and inspections.

B. Replace and compact hot-mix asphalt where core tests were taken.

C. Remove and replace or install additional hot-mix asphalt where test results or measurements indicate that it does not comply with specified requirements.

END OF SECTION 321216

SECTION 321313 - CONCRETE PAVING

PART 1 - GENERAL

1.1 SUMMARY

A. Section Includes Concrete Paving, including the following:
1. Driveways.
2. Roadways.
3. Parking lots.
4. Curbs and gutters.
5. Walks.

B. Related Requirements:
1. Section 033053 "Miscellaneous Cast-in-Place Concrete" for general building applications of concrete.

1.2 DEFINITIONS

A. Cementitious Materials: Portland cement alone or in combination with one or more of blended hydraulic cement, fly ash, slag cement, and other pozzolans.

B. W/C Ratio: The ratio by weight of water to cementitious materials.

1.3 ACTION SUBMITTALS

A. Product Data: For each type of product.

B. Design Mixtures: For each concrete paving mixture. Include alternate design mixtures when characteristics of materials, Project conditions, weather, test results, or other circumstances warrant adjustments.

1.4 INFORMATIONAL SUBMITTALS

A. Qualification Data: For qualified Installer of stamped detectable warnings.

1.5 QUALITY ASSURANCE

A. Stamped Detectable Warning Installer Qualifications: An employer of workers trained and approved by manufacturer of stamped concrete paving systems.

B. Ready-Mix-Concrete Manufacturer Qualifications: A firm experienced in manufacturing ready-mixed concrete products and that complies with ASTM C 94/C 94M requirements for production facilities and equipment.

C. Comply with Michigan Department of Transportation (MDOT) Standard Specifications for Construction, most recent edition.

1.6 FIELD CONDITIONS

A. Traffic Control: Maintain access for vehicular and pedestrian traffic as required for other construction activities.

B. Cold-Weather Concrete Placement: Protect concrete work from physical damage or reduced strength that could be caused by frost, freezing, or low temperatures. Comply with ACI 306.1 and the following:
   1. When air temperature has fallen to or is expected to fall below 40 deg F, uniformly heat water and aggregates before mixing to obtain a concrete mixture temperature of not less than 50 deg F and not more than 80 deg F at point of placement.
   2. Do not use frozen materials or materials containing ice or snow.
   3. Do not use calcium chloride, salt, or other materials containing antifreeze agents or chemical accelerators unless otherwise specified and approved in design mixtures.

C. Hot-Weather Concrete Placement: Comply with ACI 301 and as follows when hot-weather conditions exist:
   1. Cool ingredients before mixing to maintain concrete temperature below 90 deg F at time of placement. Chilled mixing water or chopped ice may be used to control temperature, provided water equivalent of ice is calculated in total amount of mixing water. Using liquid nitrogen to cool concrete is Contractor's option.
   2. Cover steel reinforcement with water-soaked burlap, so steel temperature will not exceed ambient air temperature immediately before embedding in concrete.
   3. Fog-spray forms, steel reinforcement, and subgrade just before placing concrete. Keep subgrade moisture uniform without standing water, soft spots, or dry areas.

PART 2 - PRODUCTS

2.1 CONCRETE, GENERAL

A. ACI Publications: Comply with ACI 301 unless otherwise indicated.

B. Michigan Department of Transportation (MDOT): Materials for form, steel reinforcement, joint materials, and curing materials shall comply with current MDOT Specifications, if not specified in this section or in Section 033053 Miscellaneous Cast-In-Place Concrete.

2.2 FORMS

A. Form Materials: Plywood, metal, metal-framed plywood, or other approved panel-type materials to provide full-depth, continuous, straight, and smooth exposed surfaces.
   1. Use flexible or uniformly curved forms for curves with a radius of 100 feet or less.

B. Form-Release Agent: Commercially formulated form-release agent that will not bond with, stain, or adversely affect concrete surfaces and that will not impair subsequent treatments of concrete surfaces.

2.3 STEEL REINFORCEMENT

A. Plain-Steel Welded-Wire Reinforcement: ASTM A 1064/A 1064M, fabricated from as-drawn steel wire into flat sheets.

B. Deformed-Steel Welded-Wire Reinforcement: ASTM A 1064/A 1064M, flat sheet.

C. Epoxy-Coated Welded-Wire Reinforcement: ASTM A 884/A 884M, Class A, plain steel.

D. Reinforcing Bars: ASTM A 615/A 615M, Grade 60; deformed.

E. Galvanized Reinforcing Bars: ASTM A 767/A 767M, Class II zinc coated, hot-dip galvanized after fabrication and bending; with ASTM A 615/A 615M, Grade 60 deformed bars.

F. Epoxy-Coated Reinforcing Bars: ASTM A 775/A 775M or ASTM A 934/A 934M; with ASTM A 615/A 615M, Grade 60 deformed bars.

G. Steel Bar Mats: ASTM A 184/A 184M; with ASTM A 615/A 615M, Grade 60 deformed bars; assembled with clips.

H. Plain-Steel Wire: ASTM A 1064/A 1064M, as drawn.

I. Deformed-Steel Wire: ASTM A 1064/A 1064M.

J. Joint Dowel Bars: ASTM A 615/A 615M, Grade 60 plain-steel bars; zinc coated (galvanized) after fabrication according to ASTM A 767/A 767M, Class I coating. Cut bars true to length with ends square and free of burrs.

K. Epoxy-Coated, Joint Dowel Bars: ASTM A 775/A 775M; with ASTM A 615/A 615M, Grade 60 plain-steel bars.

L. Tie Bars: ASTM A 615/A 615M, Grade 60; deformed.

M. Hook Bolts: ASTM A 307, Grade A, internally and externally threaded. Design hook-bolt joint assembly to hold coupling against paving form and in position during concreting operations, and to permit removal without damage to concrete or hook bolt.

N. Bar Supports: Bolsters, chairs, spacers, and other devices for spacing, supporting, and fastening reinforcing bars, welded-wire reinforcement, and dowels in place. Manufacture bar supports according to CRSI's "Manual of Standard Practice" from steel wire, plastic, or precast concrete of greater compressive strength than concrete specified, and as follows:
   1. Equip wire bar supports with sand plates or horizontal runners where base material will not support chair legs.
   2. For epoxy-coated reinforcement, use epoxy-coated or other dielectric-polymer-coated wire bar supports.

O. Epoxy Repair Coating: Liquid, two-part, epoxy repair coating, compatible with epoxy coating on reinforcement.

P. Zinc Repair Material: ASTM A 780/A 780M.

2.4 CONCRETE MATERIALS

A. Cementitious Materials: Use the following cementitious materials, of same type, brand, and source throughout Project:
   1. Portland Cement: ASTM C 150/C 150M, portland cement Type I .

2. Fly Ash: ASTM C 618, Class F.
3. Slag Cement: ASTM C 989/C 989M, Grade 100 or 120.

B. Normal-Weight Aggregates: ASTM C 33/C 33M, Class 4S, uniformly graded. Provide aggregates from a single source.
1. Maximum Coarse-Aggregate Size: 3/4 inch nominal.
2. Fine Aggregate: Free of materials with deleterious reactivity to alkali in cement.

C. Exposed Aggregate: Selected, hard, and durable; washed; free of materials with deleterious reactivity to cement or that cause staining; from a single source, with gap-graded coarse aggregate as follows:
1. Aggregate Sizes: 3/4 to 1 inch nominal.

D. Air-Entraining Admixture: ASTM C 260/C 260M.

E. Chemical Admixtures: Admixtures certified by manufacturer to be compatible with other admixtures and to contain not more than 0.1 percent water-soluble chloride ions by mass of cementitious material.
1. Water-Reducing Admixture: ASTM C 494/C 494M, Type A.
2. Retarding Admixture: ASTM C 494/C 494M, Type B.
3. Water-Reducing and Retarding Admixture: ASTM C 494/C 494M, Type D.
4. High-Range, Water-Reducing Admixture: ASTM C 494/C 494M, Type F.
5. High-Range, Water-Reducing and Retarding Admixture: ASTM C 494/C 494M, Type G.
6. Plasticizing and Retarding Admixture: ASTM C 1017/C 1017M, Type II.

F. Water: Potable and complying with ASTM C 94/C 94M.

2.5 FIBER REINFORCEMENT

A. Synthetic Fiber: Monofilament polypropylene fibers engineered and designed for use in decorative concrete paving, complying with ASTM C 1116/C 1116M, Type III, 1/2 to 1-1/2 inches long.

2.6 CURING MATERIALS

A. Absorptive Cover: AASHTO M 182, Class 3, burlap cloth made from jute or kenaf, weighing approximately 9 oz./sq. yd dry.

B. Moisture-Retaining Cover: ASTM C 171, polyethylene film or white burlap-polyethylene sheet.

C. Water: Potable.

D. Evaporation Retarder: Waterborne, monomolecular, film forming, manufactured for application to fresh concrete.

E. Clear, Waterborne, Membrane-Forming Curing Compound: ASTM C 309, Type 1, Class B, dissipating.

F. White, Waterborne, Membrane-Forming Curing Compound: ASTM C 309, Type 2, Class B, dissipating.

2.7 RELATED MATERIALS

A. Joint Fillers: ASTM D 1751, asphalt-saturated cellulosic fiber in preformed strips.

B. Slip-Resistive Aggregate Finish: Factory-graded, packaged, rustproof, nonglazing, abrasive aggregate of fused aluminum-oxide granules or crushed emery aggregate containing not less than 50 percent aluminum oxide and not less than 20 percent ferric oxide; unaffected by freezing, moisture, and cleaning materials.

C. Bonding Agent: ASTM C 1059/C 1059M, Type II, non-redispersible, acrylic emulsion or styrene butadiene.

D. Epoxy-Bonding Adhesive: ASTM C 881/C 881M, two-component epoxy resin capable of humid curing and bonding to damp surfaces; of class suitable for application temperature, of grade complying with requirements.

E. Chemical Surface Retarder: Water-soluble, liquid, set retarder with color dye, for horizontal concrete surface application, capable of temporarily delaying final hardening of concrete to a depth of 1/8 to 1/4 inch.

F. Pigmented Mineral Dry-Shake Hardener: Factory-packaged, dry combination of Portland cement, graded quartz aggregate, color pigments, and plasticizing admixture. Use color pigments that are finely ground, nonfading mineral oxides interground with cement.

G. Rock Salt: Sodium chloride crystals, kiln dried, coarse gradation with 100 percent passing 3/8-inch (sieve and 85 percent retained on a No. 8 sieve.

2.8 STAMPED DETECTABLE WARNING MATERIALS

A. Detectable Warning Stamp: Semirigid polyurethane mats with formed underside capable of imprinting detectable warning pattern on plastic concrete; perforated with a vent hole at each dome.
   1. Detectable Warning Stamp to meet current MDOT standards, unless otherwise specified by the City of Brighton.

2.9 CONCRETE MIXTURES

A. Prepare design mixtures, proportioned according to ACI 301 and MDOT Specifications for each type and strength of normal-weight concrete, and as determined by either laboratory trial mixtures or field experience.
   1. Use a qualified independent testing agency for preparing and reporting proposed concrete design mixtures for the trial batch method.

2.10 CONCRETE MIXING

A. Ready-Mixed Concrete: Measure, batch, and mix concrete materials and concrete according to ASTM C 94/C 94M. Furnish batch certificates for each batch discharged and used in the Work.

1. When air temperature is between 85 and 90 deg F , reduce mixing and delivery time from 1-1/2 hours to 75 minutes; when air temperature is above 90 deg F, reduce mixing and delivery time to 60 minutes.

PART 3 - EXECUTION

3.1 EXAMINATION

A. Examine exposed subgrades and subbase surfaces for compliance with requirements for dimensional, grading, and elevation tolerances.

B. Proof-roll prepared subbase surface below concrete paving to identify soft pockets and areas of excess yielding.
   1. Completely proof-roll subbase in one direction and repeat in perpendicular direction. Limit vehicle speed to 3 mph.
   2. Proof-roll with a pneumatic-tired and loaded, 10-wheel, tandem-axle dump truck weighing not less than 15 tons.
   3. Correct subbase with soft spots and areas of pumping or rutting exceeding depth of 1/2 inch according to requirements in MDOT Specifications."

C. Proceed with installation only after unsatisfactory conditions have been corrected.

3.2 PREPARATION

A. Remove loose material from compacted subbase surface immediately before placing concrete.

3.3 EDGE FORMS AND SCREED CONSTRUCTION

A. Set, brace, and secure edge forms, bulkheads, and intermediate screed guides to required lines, grades, and elevations. Install forms to allow continuous progress of work and so forms can remain in place at least 24 hours after concrete placement.

B. Clean forms after each use and coat with form-release agent to ensure separation from concrete without damage.

3.4 CONCRETE PLACEMENT

A. Before placing concrete, inspect and complete formwork installation, steel reinforcement, and items to be embedded or cast-in.

B. Remove snow, ice, or frost from subbase surface and steel reinforcement before placing concrete. Do not place concrete on frozen surfaces.

C. Moisten subbase to provide a uniform dampened condition at time concrete is placed. Do not place concrete around manholes or other structures until they are at required finish elevation and alignment.

D. Comply with ACI 301 requirements for measuring, mixing, transporting, and placing concrete.

E. Deposit and spread concrete in a continuous operation between transverse joints. Do not push or drag concrete into place or use vibrators to move concrete into place.

F. Consolidate concrete according to ACI 301 by mechanical vibrating equipment supplemented by hand spading, rodding, or tamping.
   1. Consolidate concrete along face of forms and adjacent to transverse joints with an internal vibrator. Keep vibrator away from joint assemblies, reinforcement, or side forms. Use only square-faced shovels for hand spreading and consolidation. Consolidate with care to prevent dislocating reinforcement, dowels and joint devices.

G. Screed paving surface with a straightedge and strike off.

H. Commence initial floating using bull floats or darbies to impart an open-textured and uniform surface plane before excess moisture or bleedwater appears on the surface. Do not further disturb concrete surfaces before beginning finishing operations or spreading surface treatments.

I. Curbs and Gutters: Use design mixture for automatic machine placement. Produce curbs and gutters to required cross section, lines, grades, finish, and jointing.

J. Slip-Form Paving: Use design mixture for automatic machine placement. Produce paving to required thickness, lines, grades, finish, and jointing.
   1. Compact subbase and prepare subgrade of sufficient width to prevent displacement of slip-form paving machine during operations.

3.5 DETECTABLE WARNING INSTALLATION

A. Stamped Detectable Warnings: Install stamped detectable warnings as part of a continuous concrete paving placement and according to stamp-mat manufacturer's written instructions.
   1. Before using stamp mats, verify that the vent holes are unobstructed.
   2. Apply liquid release agent to the concrete surface and the stamp mat.
   3. Stamping: After application and final floating of pigmented mineral dry-shake hardener, accurately align and place stamp mats in sequence. Uniformly load, gently vibrate, and press mats into concrete to produce imprint pattern on concrete surface. Load and tamp mats directly perpendicular to the stamp-mat surface to prevent distortion in shape of domes. Press and tamp until mortar begins to come through all of the vent holes. Gently remove stamp mats.
   4. Trimming: After 24 hours, cut off the tips of mortar formed by the vent holes.
   5. Remove residual release agent according to manufacturer's written instructions, but no fewer than three days after stamping concrete. High-pressure-wash surface and joint patterns, taking care not to damage stamped concrete. Control, collect, and legally dispose of runoff.

3.6 CONCRETE PROTECTION AND CURING

A. General: Protect freshly placed concrete from premature drying and excessive cold or hot temperatures.

B. Comply with ACI 306.1 for cold-weather protection and MDOT specifications.

3.7 PAVING TOLERANCES

A. Comply with tolerances in ACI 117 and MDOT specifications.

3.8 FIELD QUALITY CONTROL

A. Testing Agency: Engage a qualified testing agency to perform tests and inspections.

B. Testing to meet requirements of MDOT Specifications.

3.9 REPAIR AND PROTECTION

A. Remove and replace concrete paving that is broken, damaged, or defective or that does not comply with requirements in this Section. Remove work in complete sections from joint to joint unless otherwise approved by Engineer.

B. Drill test cores, where directed by Engineer, when necessary to determine magnitude of cracks or defective areas. Fill drilled core holes in satisfactory paving areas with portland cement concrete bonded to paving with epoxy adhesive.

C. Protect concrete paving from damage. Exclude traffic from paving for at least 14 days after placement. When construction traffic is permitted, maintain paving as clean as possible by removing surface stains and spillage of materials as they occur.

D. Maintain concrete paving free of stains, discoloration, dirt, and other foreign material. Sweep paving not more than two days before date scheduled for Substantial Completion inspections.

END OF SECTION 321313

SECTION 329200 - TURF AND GRASSES

PART 1 - GENERAL

1.1 SUMMARY

A. Section Includes:
1. Seeding.
2. Hydroseeding.
3. Sodding.
4. Erosion-control material(s).

1.2 DEFINITIONS

A. Finish Grade: Elevation of finished surface of planting soil.

B. Pesticide: A substance or mixture intended for preventing, destroying, repelling, or mitigating a pest. Pesticides include insecticides, miticides, herbicides, fungicides, rodenticides, and molluscicides. They also include substances or mixtures intended for use as a plant regulator, defoliant, or desiccant.

C. Pests: Living organisms that occur where they are not desired or that cause damage to plants, animals, or people. Pests include insects, mites, grubs, mollusks (snails and slugs), rodents (gophers, moles, and mice), unwanted plants (weeds), fungi, bacteria, and viruses.

D. Subgrade: The surface or elevation of subsoil remaining after excavation is complete, or the top surface of a fill or backfill before planting soil is placed.

1.3 INFORMATIONAL SUBMITTALS

A. Certification of Grass Seed: From seed vendor for each grass-seed monostand or mixture, stating the botanical and common name, percentage by weight of each species and variety, and percentage of purity, germination, and weed seed. Include the year of production and date of packaging.

B. Product Certificates: For fertilizers, from manufacturer.

1.4 QUALITY ASSURANCE

A. Installer Qualifications: A qualified landscape installer whose work has resulted in successful turf establishment.
1. Professional Membership: Installer shall be a member in good standing of either the Professional Landcare Network or the American Nursery and Landscape Association.
2. Pesticide Applicator: State licensed, commercial.
3. Seeding, Mulching, Sodding and Weed Control shall comply with Michigan Department of Transportation (MDOT), most recent edition.

1.5 DELIVERY, STORAGE, AND HANDLING

A. Seed and Other Packaged Materials: Deliver packaged materials in original, unopened containers showing weight, certified analysis, name and address of manufacturer, and indication of compliance with state and Federal laws, as applicable.

B. Sod: Harvest, deliver, store, and handle sod according to requirements in "Specifications for Turfgrass Sod Materials" and "Specifications for Turfgrass Sod Transplanting and Installation" sections in TPI's "Guideline Specifications to Turfgrass Sodding." Deliver sod within 24 hours of harvesting and in time for planting promptly. Protect sod from breakage and drying.

C. Bulk Materials:
   1. Do not dump or store bulk materials near structures, utilities, walkways and pavements, or on existing turf areas or plants.
   2. Provide erosion-control measures to prevent erosion or displacement of bulk materials; discharge of soil-bearing water runoff; and airborne dust reaching adjacent properties, water conveyance systems, or walkways.
   3. Accompany each delivery of bulk materials with appropriate certificates.

1.6 FIELD CONDITIONS

A. Planting Restrictions: Plant during one of the following periods. Coordinate planting periods with initial maintenance periods to provide required maintenance from date of Substantial Completion.

B. Weather Limitations: Proceed with planting only when existing and forecasted weather conditions permit planting to be performed when beneficial and optimum results may be obtained. Apply products during favorable weather conditions according to manufacturer's written instructions.

PART 2 - PRODUCTS

2.1 SEED

A. Grass Seed: Fresh, clean, dry, new-crop seed complying with AOSA's "Rules for Testing Seeds" for purity and germination tolerances and MDOT Specifications for Turf Establishment.

B. Seed Species:
   1. Quality: State-certified seed of grass species as listed below for solar exposure.
   2. For shoulders, slope area, or flat field: MDOT roadside mixture.
   3. For flat lawn area, MDOT Class A mixture.

2.2 TURFGRASS SOD

A. Turfgrass Sod: Sodding to comply with MDOT specifications for Turf Establishment.

2.3 MULCHES

A. Mulches to comply with MDOT specifications for Turf Establishment.

2.4 PESTICIDES

A. General: Pesticide, registered and approved by the EPA, acceptable to authorities having jurisdiction, and of type recommended by manufacturer for each specific problem and as required for Project conditions and application. Do not use restricted pesticides unless authorized in writing by the City of Brighton.

B. Pre-Emergent Herbicide (Selective and Nonselective): Effective for controlling the germination or growth of weeds within planted areas at the soil level directly below the mulch layer.

C. Post-Emergent Herbicide (Selective and Nonselective): Effective for controlling weed growth that has already germinated.

2.5 EROSION-CONTROL MATERIALS

A. Erosion-Control Blankets: Biodegradable wood excelsior, straw, or coconut-fiber mat enclosed in a photodegradable plastic mesh. Include manufacturer's recommended steel wire staples, 6 inches long.

B. Erosion-Control Fiber Mesh: Biodegradable burlap or spun-coir mesh, a minimum of 0.92 lb/sq. yd. with 50 to 65 percent open area. Include manufacturer's recommended steel wire staples, 6 inches long.

C. Erosion-Control Mats: Cellular, nonbiodegradable slope-stabilization mats designed to isolate and contain small areas of soil over steeply sloped surface, of 4-inch nominal mat thickness. Include manufacturer's recommended anchorage system for slope conditions.

PART 3 - EXECUTION

3.1 EXAMINATION

A. Examine areas to be planted for compliance with requirements and other conditions affecting installation and performance of the Work.
   1. Verify that no foreign or deleterious material or liquid such as paint, paint washout, concrete slurry, concrete layers or chunks, cement, plaster, oils, gasoline, diesel fuel, paint thinner, turpentine, tar, roofing compound, or acid has been deposited in soil within a planting area.
   2. Suspend planting operations during periods of excessive soil moisture until the moisture content reaches acceptable levels to attain the required results.
   3. Uniformly moisten excessively dry soil that is not workable or which is dusty.

B. Proceed with installation only after unsatisfactory conditions have been corrected.

C. If contamination by foreign or deleterious material or liquid is present in soil within a planting area, remove the soil and contamination as directed by Architect and replace with new planting soil.

3.2 PREPARATION

A. Protect structures; utilities; sidewalks; pavements; and other facilities, trees, shrubs, and plantings from damage caused by planting operations.
   1. Protect adjacent and adjoining areas from hydroseeding and hydromulching overspray.
   2. Protect grade stakes set by others until directed to remove them.

B. Install erosion-control measures to prevent erosion or displacement of soils and discharge of soil-bearing water runoff or airborne dust to adjacent properties and walkways.

3.3 TURF AREA PREPARATION

A. General: Prepare planting area for soil placement and mix planting soil according to MDOT Specifications.

B. Placing Planting Soil: Place and mix planting soil in place over exposed subgrade.
   1. Reduce elevation of planting soil to allow for soil thickness of sod.

C. Moisten prepared area before planting if soil is dry. Water thoroughly and allow surface to dry before planting. Do not create muddy soil.

D. Before planting, obtain City's acceptance of finish grading; restore planting areas if eroded or otherwise disturbed after finish grading.

3.4 PREPARATION FOR EROSION-CONTROL MATERIALS

A. Prepare area as specified in "Turf Area Preparation" Article.

B. For erosion-control mats, install planting soil in two lifts, with second lift equal to thickness of erosion-control mats. Install erosion-control mat and fasten as recommended by material manufacturer.

C. Fill cells of erosion-control mat with planting soil and compact before planting.

D. For erosion-control blanket or mesh, install from top of slope, working downward, and as recommended by material manufacturer for site conditions. Fasten as recommended by material manufacturer.

E. Moisten prepared area before planting if surface is dry. Water thoroughly and allow surface to dry before planting. Do not create muddy soil.

3.5 SEEDING

A. Sow seed with spreader or seeding machine. Do not broadcast or drop seed when wind velocity exceeds 5 mph.
   1. Evenly distribute seed by sowing equal quantities in two directions at right angles to each other.

2. Do not use wet seed or seed that is moldy or otherwise damaged.
3. Do not seed against existing trees. Limit extent of seed to outside edge of planting saucer.

B. Sow seed at a total rate of per MDOT specifications.

C. Rake seed lightly into top 1/8 inch of soil, roll lightly, and water with fine spray.

D. Protect seeded areas with slopes exceeding 1:4 with erosion-control blankets and 1:6 with erosion-control fiber mesh installed and stapled according to manufacturer's written instructions.

E. Protect seeded areas with erosion-control mats where indicated on Drawings; install and anchor according to manufacturer's written instructions.

F. Protect seeded areas with slopes not exceeding 1:6 by spreading straw mulch. Spread uniformly at a minimum rate of 2 tons/acre to form a continuous blanket 1-1/2 inches in loose thickness over seeded areas. Spread by hand, blower, or other suitable equipment.
1. Anchor straw mulch by crimping into soil with suitable mechanical equipment.
2. Bond straw mulch by spraying with asphalt emulsion at a rate of 10 to 13 gal./1000 sq. ft. Take precautions to prevent damage or staining of structures or other plantings adjacent to mulched areas. Immediately clean damaged or stained areas.

G. Protect seeded areas from hot, dry weather or drying winds by applying compost mulch within 24 hours after completing seeding operations. Soak areas, scatter mulch uniformly to a thickness of 3/16 inch and roll surface smooth.

3.6 HYDROSEEDING

A. Hydroseeding shall comply with MDOT Specifications.

3.7 SODDING

A. Sodding shall comply with MDOT Specifications

3.8 TURF MAINTENANCE

A. General: Maintain and establish turf by watering, fertilizing, weeding, mowing, trimming, replanting, and performing other operations as required to establish healthy, viable turf. Roll, regrade, and replant bare or eroded areas and remulch to produce a uniformly smooth turf. Provide materials and installation the same as those used in the original installation.
1. Fill in as necessary soil subsidence that may occur because of settling or other processes. Replace materials and turf damaged or lost in areas of subsidence.
2. In areas where mulch has been disturbed by wind or maintenance operations, add new mulch and anchor as required to prevent displacement.
3. Apply treatments as required to keep turf and soil free of pests and pathogens or disease. Use integrated pest management practices whenever possible to minimize the use of pesticides and reduce hazards.

B. Watering: Install and maintain temporary piping, hoses, and turf-watering equipment to convey water from sources and to keep turf uniformly moist to a depth of 4 inches, if required by City.
   1. Schedule watering to prevent wilting, puddling, erosion, and displacement of seed or mulch. Lay out temporary watering system to avoid walking over muddy or newly planted areas.
   2. Water turf with fine spray at a minimum rate of 1 inch per week unless rainfall precipitation is adequate.

C. Mow turf as soon as top growth is tall enough to cut. Repeat mowing to maintain specified height without cutting more than one-third of grass height. Remove no more than one-third of grass-leaf growth in initial or subsequent mowings. Do not delay mowing until grass blades bend over and become matted. Do not mow when grass is wet.

3.9 SATISFACTORY TURF

A. Turf installations shall meet the following criteria as determined by Engineer:
   1. Satisfactory Seeded Turf: At end of maintenance period, a healthy, uniform, close stand of grass has been established, free of weeds and surface irregularities, with coverage exceeding 90 percent over any 10 sq. ft. and bare spots not exceeding 5 by 5 inches.
   2. Satisfactory Sodded Turf: At end of maintenance period, a healthy, well-rooted, even-colored, viable turf has been established, free of weeds, open joints, bare areas, and surface irregularities.

B. Use specified materials to reestablish turf that does not comply with requirements, and continue maintenance until turf is satisfactory.

3.10 PESTICIDE APPLICATION

A. Apply pesticides and other chemical products and biological control agents according to requirements of authorities having jurisdiction and manufacturer's written recommendations. Coordinate applications with City’s operations and others in proximity to the Work. Notify City of Brighton before each application is performed.

B. Post-Emergent Herbicides (Selective and Nonselective): Apply only as necessary to treat already-germinated weeds and according to manufacturer's written recommendations.

3.11 CLEANUP AND PROTECTION

A. Promptly remove soil and debris created by turf work from paved areas. Clean wheels of vehicles before leaving site to avoid tracking soil onto roads, walks, or other paved areas.

B. Remove surplus soil and waste material, including excess subsoil, unsuitable soil, trash, and debris, and legally dispose of them off property.

C. Erect temporary fencing or barricades and warning signs as required to protect newly planted areas from traffic. Maintain fencing and barricades throughout initial maintenance period and remove after plantings are established.

D. Remove nondegradable erosion-control measures after grass establishment period.

END OF SECTION 329200

SECTION 330500 - COMMON WORK RESULTS FOR UTILITIES

PART 1 - GENERAL

1.1 SUMMARY

A. This Section includes the following:
1. Piping joining materials.
2. Sleeves.
3. Identification devices.
4. Grout.
5. Piping system common requirements.
6. Equipment installation common requirements.
7. Concrete bases.
8. Metal supports and anchorages.

1.2 QUALITY ASSURANCE

A. Comply with ASME A13.1 for lettering size, length of color field, colors, and viewing angles of identification devices.

PART 2 - PRODUCTS

2.1 PIPING JOINING MATERIALS

A. Flange Bolts and Nuts: ASME B18.2.1, carbon steel, unless otherwise indicated.

B. Plastic, Pipe-Flange Gasket, Bolts, and Nuts: Type and material recommended by piping system manufacturer, unless otherwise indicated.

C. Solder Filler Metals: ASTM B 32, lead-free alloys. Include water-flushable flux according to ASTM B 813.

D. Solvent Cements for Joining Plastic Piping:
1. ABS Piping: ASTM D 2235.
2. CPVC Piping: ASTM F 493.
3. PVC Piping: ASTM D 2564. Include primer according to ASTM F 656.
4. PVC to ABS Piping Transition: ASTM D 3138.

2.2 SLEEVES

A. Galvanized-Steel Sheet Sleeves: 0.0239-inch minimum thickness; round tube closed with welded longitudinal joint.

B. Steel Pipe Sleeves: ASTM A 53/A 53M, Type E, Grade B, Schedule 40, galvanized, plain ends.

C. Cast-Iron Sleeves: Cast or fabricated "wall pipe" equivalent to ductile-iron pressure pipe, with plain ends and integral waterstop, unless otherwise indicated.

D. PVC Pipe Sleeves: ASTM D 1785, Schedule 40.

E. Molded PE Sleeves: Reusable, PE, tapered-cup shaped, and smooth outer surface with nailing flange for attaching to wooden forms.

2.3 GROUT

A. Description: ASTM C 1107, Grade B, nonshrink and nonmetallic, dry hydraulic-cement grout.
   1. Characteristics: Post hardening, volume adjusting, nonstaining, noncorrosive, nongaseous, and recommended for interior and exterior applications.
   2. Design Mix: 5000-psi, 28-day compressive strength.
   3. Packaging: Premixed and factory packaged.

PART 3 - EXECUTION

3.1 PIPING INSTALLATION

A. Install piping according to the following requirements and utilities Sections specifying piping systems.

B. Install piping as indicated unless deviations to layout are approved on the Coordination Drawings.

C. Install piping at indicated slopes.

D. Install piping free of sags and bends.

E. Install fittings for changes in direction and branch connections.

F. Select system components with pressure rating equal to or greater than system operating pressure.

3.2 PIPING JOINT CONSTRUCTION

A. Join pipe and fittings according to the following requirements and utilities Sections specifying piping systems.

B. Ream ends of pipes and tubes and remove burrs. Bevel plain ends of steel pipe.

C. Remove scale, slag, dirt, and debris from inside and outside of pipe and fittings before assembly.

D. Threaded Joints: Thread pipe with tapered pipe threads according to ASME B1.20.1. Cut threads full and clean using sharp dies. Ream threaded pipe ends to remove burrs and restore full ID. Join pipe fittings and valves as follows:
   1. Apply appropriate tape or thread compound to external pipe threads unless dry seal threading is specified.
   2. Damaged Threads: Do not use pipe or pipe fittings with threads that are corroded or damaged. Do not use pipe sections that have cracked or open welds.

E. Flanged Joints: Select appropriate gasket material, size, type, and thickness for service application. Install gasket concentrically positioned. Use suitable lubricants on bolt threads.

F. Grooved Joints: Assemble joints with grooved-end pipe coupling with coupling housing, gasket, lubricant, and bolts according to coupling and fitting manufacturer's written instructions.

G. Soldered Joints: Apply ASTM B 813 water-flushable flux, unless otherwise indicated, to tube end. Construct joints according to ASTM B 828 or CDA's "Copper Tube Handbook," using lead-free solder alloy (0.20 percent maximum lead content) complying with ASTM B 32.

H. Pressure-Sealed Joints: Assemble joints for plain-end copper tube and mechanical pressure seal fitting with proprietary crimping tool to according to fitting manufacturer's written instructions.

I. Plastic Piping Solvent-Cemented Joints: Clean and dry joining surfaces. Join pipe and fittings according to the following:
   1. Comply with ASTM F 402 for safe-handling practice of cleaners, primers, and solvent cements.
   2. ABS Piping: Join according to ASTM D 2235 and ASTM D 2661 appendixes.
   3. CPVC Piping: Join according to ASTM D 2846/D 2846M Appendix.
   4. PVC Pressure Piping: Join schedule number ASTM D 1785, PVC pipe and PVC socket fittings according to ASTM D 2672. Join other-than-schedule-number PVC pipe and socket fittings according to ASTM D 2855.
   5. PVC Nonpressure Piping: Join according to ASTM D 2855.
   6. PVC to ABS Nonpressure Transition Fittings: Join according to ASTM D 3138 Appendix.

J. Plastic Pressure Piping Gasketed Joints: Join according to ASTM D 3139.

K. Plastic Nonpressure Piping Gasketed Joints: Join according to ASTM D 3212.

L. Plastic Piping Heat-Fusion Joints: Clean and dry joining surfaces by wiping with clean cloth or paper towels. Join according to ASTM D 2657.
   1. Plain-End PE Pipe and Fittings: Use butt fusion.
   2. Plain-End PE Pipe and Socket Fittings: Use socket fusion.

M. Bonded Joints: Prepare pipe ends and fittings, apply adhesive, and join according to pipe manufacturer's written instructions.

3.3 PIPING CONNECTIONS

A. Make connections according to the following, unless otherwise indicated:
   1. Install unions, in piping NPS 2 and smaller, adjacent to each valve and at final connection to each piece of equipment.
   2. Install flanges, in piping NPS 2-1/2 and larger, adjacent to flanged valves and at final connection to each piece of equipment.

3.4 GROUTING

A. Clean surfaces that will come into contact with grout.

B. Provide forms as required for placement of grout.

C. Avoid air entrapment during placement of grout.

D. Place grout, completely filling equipment bases.

E. Place grout on concrete bases and provide smooth bearing surface for equipment.

F. Place grout around anchors.

G. Cure placed grout.

END OF SECTION 330500

SECTION 334100 - STORM UTILITY DRAINAGE PIPING

PART 1 - GENERAL

1.1 SUMMARY

A. Section Includes:
1. Pipe and fittings.
2. Nonpressure transition couplings.
3. Pressure pipe couplings.
4. Expansion joints and deflection fittings.
5. Backwater valves.
6. Cleanouts.
7. Drains.
8. Encasement for piping.
9. Manholes.
10. Channel drainage systems.
11. Catch basins.
12. Stormwater inlets.
13. Stormwater detention structures.
14. Pipe outlets.
15. Dry wells.
16. Stormwater disposal systems.

1.2 REFERENCED STANDARDARDS

A. This section references American Society for Testing and Materials (ASTM), American National Standards Institute (ANSI), and American Water Works Association (AWWA), UNI-Bell PVC Pipe Association (UNI), which are made part hereof by such references, and shall be the latest edition and revision thereof. All material, manufacturing, operations, testing, inspection and production of Poly (Vinyl Chloride) (PVC) sewer pipe shall conform to the following referenced standards:
1. ASTM C33 Standard Specification for Concrete Aggregates
2. ASTM D448 Standard Classification for Sizes of Aggregate for Road & Bridge Construction.
3. ASTM F477 Standard Specification for Elastomeric Seals (Gaskets) for Joining Plastic Pipe.
4. ASTM F679 Standard Specification for Poly (Vinyl Chloride) (PVC) Large-Diameter Plastic Gravity Sewer Pipe and Fittings.
5. ASTM F789 Standard Specification for Type PS-46 and Type PS-115 Poly (Vinyl Chloride) (PVC) Plastic Gravity Flow Sewer Pipe and Fittings.
6. ASTM F794 Standard Specification for Poly (Vinyl Chloride) (PVC) Profile Gravity Sewer Pipe and Fittings Based on Controlled Inside Diameter.
7. ASTM D3034 Standard Specification for Type PSM Poly (Vinyl Chloride) (PVC) Sewer Pipe and Fittings.
8. UNI-B-6 Recommended Practice for Low-Pressure Air Testing of Installed Sewer Pipe.

1.3 ACTION SUBMITTALS

A. Product Data: For each type of product indicated.

B. Shop Drawings:
1. Manholes: Include plans, elevations, sections, details, frames, and covers.
2. Catch basins, stormwater inlets and dry wells. Include plans, elevations, sections, details, frames, covers, and grates.
3. Stormwater Detention Structures: Include plans, elevations, sections, details, frames, covers, design calculations, and concrete design-mix reports.

1.4 DELIVERY, STORAGE, AND HANDLING

A. Do not store plastic manholes, pipe, and fittings in direct sunlight.

B. Protect pipe, pipe fittings, and seals from dirt and damage.

C. Handle manholes according to manufacturer's written rigging instructions.

D. Handle catch basins and stormwater inlets according to manufacturer's written rigging instructions.

1.5 PROJECT CONDITIONS

A. Interruption of Existing Storm Drainage Service: Do not interrupt service to facilities occupied by Owner or others unless permitted under the following conditions and then only after arranging to provide temporary service according to requirements indicated:
1. Notify City of Brighton Utilities Director no fewer than two days in advance of proposed interruption of service.
2. Do not proceed with interruption of service without City of Brighton Utilities Director's written permission.

PART 2 - PRODUCTS

2.1 DUCTILE-IRON, CULVERT PIPE AND FITTINGS

A. Pipe: ASTM A 716, for push-on joints.

B. Standard Fittings: AWWA C110, ductile or gray iron, for push-on joints.

C. Compact Fittings: AWWA C153, for push-on joints.

D. Gaskets: AWWA C111, rubber.

2.2 DUCTILE-IRON, PRESSURE PIPE AND FITTINGS

A. Push-on-Joint Piping:
1. Pipe: AWWA C151, for push-on joints.
2. Standard Fittings: AWWA C110, ductile or gray iron, for push-on joints.
3. Compact Fittings: AWWA C153, for push-on joints.
4. Gaskets: AWWA C111, rubber, of shape matching pipe and fittings.

B. Mechanical-Joint Piping:
   1. Pipe: AWWA C151, with bolt holes in bell.
   2. Standard Fittings: AWWA C110, ductile or gray iron, with bolt holes in bell.
   3. Compact Fittings: AWWA C153, with bolt holes in bells.
   4. Glands: Cast or ductile iron, with bolt holes and high-strength, cast-iron or high-strength, low-alloy steel bolts and nuts.
   5. Gaskets: AWWA C111, rubber, of shape matching pipe, fittings, and glands.

2.3 STEEL PIPE AND FITTINGS

A. Corrugated-Steel Pipe and Fittings: ASTM A 760/A 760M, Type I with fittings of similar form and construction as pipe.
   1. Special-Joint Bands: Corrugated steel with O-ring seals.
   2. Standard-Joint Bands: Corrugated steel.
   3. Coating: Aluminum.

2.4 PVC TRUSS PIPE AND FITTINGS

A. PVC Truss Pipe and Fittings: ASTM D 2680-01, with bell-and-spigot ends for gasketed joints.
   1. NPS 3 to NPS 6: SDR 35.
   2. NPS 8 to NPS 12: SDR 42.

B. Gaskets: ASTM F 477, elastomeric seals.

2.5 PE PIPE AND FITTINGS

A. Corrugated PE Drainage Pipe and Fittings NPS 3 to NPS 10 : AASHTO M 252M, Type S, with smooth waterway for coupling joints.
   1. Silttight Couplings: PE sleeve with ASTM D 1056, Type 2, Class A, Grade 2 gasket material that mates with tube and fittings.
   2. Soiltight Couplings: AASHTO M 252M, corrugated, matching tube and fittings.

B. Corrugated PE Pipe and Fittings NPS 12 to NPS 60; AASHTO M 294M, Type S, with smooth waterway for coupling joints.
   1. Silttight Couplings: PE sleeve with ASTM D 1056, Type 2, Class A, Grade 2 gasket material that mates with pipe and fittings.
   2. Soiltight Couplings: AASHTO M 294M, corrugated, matching pipe and fittings.

2.6 PVC PIPE AND FITTINGS

A. PVC Cellular-Core Piping:
   1. PVC Cellular-Core Pipe and Fittings: ASTM F 891, Sewer and Drain Series, PS 50 minimum stiffness, PVC cellular-core pipe with plain ends for solvent-cemented joints.
   2. Fittings: ASTM D 3034, SDR 35 or SDR 26, PVC socket-type fittings.

B. PVC Corrugated Sewer Piping:
   1. Pipe: ASTM F 949, PVC, corrugated pipe with bell-and-spigot ends for gasketed joints.
   2. Fittings: ASTM F 949, PVC molded or fabricated, socket type.

3. Gaskets: ASTM F 477, elastomeric seals.

C. PVC Profile Sewer Piping:
1. Pipe: ASTM F 794, PVC profile, gravity sewer pipe with bell-and-spigot ends for gasketed joints.
2. Fittings: ASTM D 3034, PVC with bell ends.
3. Gaskets: ASTM F 477, elastomeric seals.

D. PVC Type PSM Sewer Piping:
1. Pipe: ASTM D 3034, SDR 35 or SDR 26, PVC Type PSM sewer pipe with bell-and-spigot ends for gasketed joints.
2. Fittings: ASTM D 3034, PVC with bell ends.
3. Gaskets: ASTM F 477, elastomeric seals.

E. PVC Gravity Sewer Piping:
1. Pipe and Fittings: ASTM F 679, T-1 wall thickness, PVC gravity sewer pipe with bell-and-spigot ends and with integral ASTM F 477, elastomeric seals for gasketed joints.
2. Pipe: AWWA C900, Class 200 PVC pipe with bell-and-spigot ends for gasketed joints.
3. Fittings: AWWA C900, Class 200 PVC pipe with bell ends
4. Gaskets: ASTM F 477, elastomeric seals.

2.7 CONCRETE PIPE AND FITTINGS

A. Reinforced-Concrete Sewer Pipe and Fittings: ASTM C 76.
1. Bell-and-spigot or tongue-and-groove ends and gasketed joints with ASTM C 443, rubber gaskets.
2. Class III, Wall B or C.
3. Class IV, Wall B or C.
4. Class V, Wall B or C.
5. Wall B may be used for all pipe sizes less than 24-inch, where depth is less than 16 feet.
6. Wall C shall be used for pipe sizes 24-inch and larger at any depth and for all pipe size where depth is 16 to 25-feet.
7. No sewer shall exceed 25 feet in depth without the approval of the City. The minimum strength class (D-Load) for the pipe shall be in accordance with the following table.

REINFORCED CONCRETE PIPE Class vs. Depth to Invert			
Pipe Size	Class III	Class IV	Class V
12”	1-15	15-24	24-35
15”	1-15	15-24	24-35
18”	1-15	15-24	24-35
21”	1-15	15-24	24-35
24”	1-15	15-24	24-35
27”	11-15	15-24	24-35
30”	11-15	15-24	24-35
33”	11-15	15-24	24-35

36”	11-15	15-24	24-35
42”	11-15	15-24	24-35
48”	11-15	15-24	24-35
54”	11-15	15-24	24-35

8. The minimum pipe class required when the pipe is 6-feet or less shall be Class IV.

2.8 NONPRESSURE TRANSITION COUPLINGS

A. Comply with ASTM C 1173, elastomeric, sleeve-type, reducing or transition coupling, for joining underground nonpressure piping. Include ends of same sizes as piping to be joined, and corrosion-resistant-metal tension band and tightening mechanism on each end.

B. Sleeve Materials:
   1. For Concrete Pipes: ASTM C 443 rubber.
   2. For Cast-Iron Soil Pipes: ASTM C 564, rubber.
   3. For Plastic Pipes: ASTM F 477, elastomeric seal or ASTM D 5926, PVC.
   4. For Dissimilar Pipes: ASTM D 5926, PVC or other material compatible with pipe materials being joined.

C. Ring-Type, Flexible Couplings:
   1. Description: Elastomeric compression seal with dimensions to fit inside bell of larger pipe and for spigot of smaller pipe to fit inside ring.

2.9 EXPANSION JOINTS AND DEFLECTION FITTINGS

A. Ductile-Iron Flexible Expansion Joints:
   1. Description: Compound fitting with combination of flanged and mechanical-joint ends complying with AWWA C110 or AWWA C153. Include two gasketed ball-joint sections and one or more gasketed sleeve sections, rated for 250-psig minimum working pressure and for offset and expansion indicated.

B. Ductile-Iron Expansion Joints:
   1. Description: Three-piece assembly of telescoping sleeve with gaskets and restrained-type, ductile-iron, bell-and-spigot end sections complying with AWWA C110 or AWWA C153. Include rating for 250-psig minimum working pressure and for expansion indicated.

C. Ductile-Iron Deflection Fittings:
   1. Description: Compound-coupling fitting, with ball joint, flexing section, gaskets, and restrained-joint ends, complying with AWWA C110 or AWWA C153. Include rating for 250-psig minimum working pressure and for up to 15 degrees of deflection.

2.10 BACKWATER VALVES

A. Cast-Iron Backwater Valves:
   1. Description: ASME A112.14.1, gray-iron body and bolted cover, with bronze seat.
   2. Horizontal type; with swing check valve and hub-and-spigot ends.
   3. Combination horizontal and manual gate-valve type; with swing check valve, integral gate valve, and hub-and-spigot ends.
   4. Terminal type; with bronze seat, swing check valve, and hub inlet.

B. Plastic Backwater Valves:
   1. Description: Horizontal type; with PVC body, PVC removable cover, and PVC swing check valve.

2.11 CLEANOUTS

A. Plastic Cleanouts:
   1. Description: PVC body with PVC threaded plug. Include PVC sewer pipe fitting and riser to cleanout of same material as sewer piping.

2.12 MANHOLES

A. Standard Precast Concrete Manholes:
   1. Description: ASTM C 478, precast, reinforced concrete, of depth indicated, with provision for sealant joints.
   2. Diameter: 48 inches minimum unless otherwise indicated.
   3. Ballast: Increase thickness of precast concrete sections or add concrete to base section as required to prevent flotation.
   4. Base Section: 6-inch minimum thickness for floor slab and 4-inch minimum thickness for walls and base riser section, and separate base slab or base section with integral floor.
   5. Riser Sections: 4-inch minimum thickness, and lengths to provide depth indicated.
   6. Top Section: Eccentric-cone type unless concentric-cone or flat-slab-top type is indicated, and top of cone of size that matches grade rings.
   7. Joint Sealant: ASTM C 990, bitumen or butyl rubber.
   8. Resilient Pipe Connectors: ASTM C 923, cast or fitted into manhole walls, for each pipe connection.
   9. Steps: Individual FRP steps or ASTM A 615/A 615M, deformed, 1/2-inch steel reinforcing rods encased in ASTM D 4101, PP. wide enough to allow worker to place both feet on one step and designed to prevent lateral slippage off step. Cast or anchor steps into sidewalls at 12- to 16-inch intervals. Omit steps if total depth from floor of manhole to finished grade is less than 60 inches. Steps to be a minimum 10-inch wide.
   10. Grade Rings: Reinforced-concrete rings, 6- to 9-inch total thickness, to match diameter of manhole frame and cover, and height as required to adjust manhole frame and cover to indicated elevation and slope. Adjustment rings shall be 2-inch, 3-inch or 4-inch thickness.

B. Manhole Frames and Covers:
   1. Description: Size and type to be called out on the drawings. Include indented top design with lettering cast into cover, using wording equivalent to "STORM SEWER."
   2. Material: ASTM A 536, Grade 60-40-18 ductile or ASTM A 48/A 48M, Class 35 gray iron unless otherwise indicated.

2.13 CONCRETE

A. General: Cast-in-place concrete according to ACI 318, ACI 350/350R, and the following:
   1. Cement: ASTM C 150, Type II.
   2. Fine Aggregate: ASTM C 33, sand.
   3. Coarse Aggregate: ASTM C 33, crushed gravel.

4. Water: Potable.

B. Portland Cement Design Mix: 4000 psi minimum, with 0.45 maximum water/cementitious materials ratio.
   1. Reinforcing Fabric: ASTM A 185/A 185M, steel, welded wire fabric, plain.
   2. Reinforcing Bars: ASTM A 615/A 615M, Grade 60 (420 MPa) deformed steel.

C. Manhole Channels and Benches: Factory or field formed from concrete. Portland cement design mix, 4000 psi minimum, with 0.45 maximum water/cementitious materials ratio. Include channels and benches in manholes.
   1. Channels: Concrete invert, formed to same width as connected piping, with height of vertical sides to three-fourths of pipe diameter. Form curved channels with smooth, uniform radius and slope.

      a. Invert Slope: 1 percent through manhole.
   2. Benches: Concrete, sloped to drain into channel.

      a. Slope: 4 percent.

D. Ballast and Pipe Supports: Portland cement design mix, 3000 psi minimum, with 0.58 maximum water/cementitious materials ratio.
   1. Reinforcing Fabric: ASTM A 185/A 185M, steel, welded wire fabric, plain.
   2. Reinforcing Bars: ASTM A 615/A 615M, Grade 60 (420 MPa) deformed steel.

2.14 CATCH BASINS

A. Standard Precast Concrete Catch Basins:
   1. Description: ASTM C 478, precast, reinforced concrete, of depth indicated, with provision for sealant joints.
   2. Base Section: 6-inch minimum thickness for floor slab and 4-inch minimum thickness for walls and base riser section, and separate base slab or base section with integral floor.
   3. Riser Sections: 4-inch minimum thickness, 48-inch diameter, and lengths to provide depth indicated.
   4. Top Section: Eccentric-cone type unless concentric-cone or flat-slab-top type is indicated. Top of cone of size that matches grade rings.
   5. Joint Sealant: ASTM C 990, bitumen or butyl rubber.
   6. Adjusting Rings: Interlocking rings with level or sloped edge in thickness and shape matching catch basin frame and grate. Include sealant recommended by ring manufacturer.
   7. Grade Rings: Include two or three reinforced-concrete rings, of 6- to 9-inch total thickness, that match 24-inch- diameter frame and grate. Adjustment rings shall be 2-inch, 3-inch or 4-inch thickness.
   8. Steps: Individual FRP steps or ASTM A 615/A 615M, deformed, 1/2-inch steel reinforcing rods encased in ASTM D 4101, PP, wide enough to allow worker to place both feet on one step and designed to prevent lateral slippage off step, min 10-inches. Cast or anchor steps into sidewalls at 12- to 16-inch intervals. Omit steps if total depth from floor of catch basin to finished grade is less than 60 inches.
   9. Pipe Connectors: ASTM C 923, resilient, of size required, for each pipe connecting to base section.

B. Frames and Grates: Size and type to be called out on the drawings.

2.15 STORMWATER INLETS

A. Curb Inlets: Made with vertical curb opening, of materials and dimensions according to the Standard Details.

B. Frames and Grates: Heavy duty, according to the Standard Details.

2.16 STORMWATER DETENTION STRUCTURES

A. Cast-in-Place Concrete, Stormwater Detention Structures: Constructed of reinforced-concrete bottom, walls, and top; designed according to ASTM C 890 for A-16 (AASHTO HS20-44), heavy-traffic, structural loading; of depth, shape, dimensions, and appurtenances indicated.
   1. Ballast: Increase thickness of concrete as required to prevent flotation.
   2. Grade Rings: Include two or three reinforced-concrete rings, of 6- to 9-inch total thickness, that match 24-inch- diameter frame and cover.
   3. Steps: Individual FRP steps or ASTM A 615/A 615M, deformed, 1/2-inch steel reinforcing rods encased in ASTM D 4101, PP, wide enough to allow worker to place both feet on one step and designed to prevent lateral slippage off step. Cast or anchor steps into sidewalls at 12- to 16-inch intervals. Omit steps if total depth from floor of structure to finished grade is less than 60 inches.

B. Manhole Frames and Covers: ASTM A 536, Grade 60-40-18, ductile-iron castings designed for heavy-duty service. Include 24-inch ID by 7- to 9-inch riser with 4-inch minimum width flange, and 26-inch- diameter cover. Include indented top design with lettering cast into cover, using wording equivalent to "STORM SEWER."

2.17 PIPE OUTLETS

A. Head Walls: Cast-in-place reinforced concrete, with apron and tapered sides.

B. Riprap Basins: Broken, irregularly sized and shaped, graded stone according to MDOT Standards for Slope Protection.

PART 3 - EXECUTION

3.1 EARTHWORK

A. Excavation, trenching, and backfilling are specified in Section 312000 "Earth Moving."

3.2 PIPING INSTALLATION

A. General Locations and Arrangements: Drawing plans and details indicate general location and arrangement of underground storm drainage piping. Location and arrangement of piping layout take into account design considerations. Install piping as indicated, to extent practical. Where specific installation is not indicated, follow piping manufacturer's written instructions.

B. Install piping beginning at low point, true to grades and alignment indicated with unbroken continuity of invert. Place bell ends of piping facing upstream. Install gaskets, seals, sleeves, and couplings according to manufacturer's written instructions for use of lubricants, cements, and other installation requirements.

C. Install manholes for changes in direction unless fittings are indicated. Use fittings for branch connections unless direct tap into existing sewer is indicated.

D. Install proper size increasers, reducers, and couplings where different sizes or materials of pipes and fittings are connected. Reducing size of piping in direction of flow is prohibited.

E. When installing pipe under streets or other obstructions that cannot be disturbed, use pipe-jacking process of microtunneling.

F. Install gravity-flow, nonpressure drainage piping according to the following:
   1. Install piping pitched down in direction of flow.
   2. Install piping NPS 6 and larger with restrained joints at tee fittings and at changes in direction. Use corrosion-resistant rods, pipe or fitting manufacturer's proprietary restraint system, or cast-in-place concrete supports or anchors.
   3. Install piping with 36-inch minimum cover.
   4. Install ductile-iron piping and special fittings according to AWWA C600 or AWWA M41.
   5. Install corrugated steel piping according to ASTM A 798/A 798M.
   6. Install ABS sewer piping according to ASTM D 2321 and ASTM F 1668.
   7. Install PE corrugated sewer piping according to ASTM D 2321.
   8. Install PVC sewer piping according to ASTM D 2321 and ASTM F 1668.
   9. Install reinforced-concrete sewer piping according to ASTM C 1479 and ACPA's "Concrete Pipe Installation Manual."

G. Install force-main pressure piping according to the following:
   1. Install piping with restrained joints at tee fittings and at horizontal and vertical changes in direction. Use corrosion-resistant rods, pipe or fitting manufacturer's proprietary restraint system, or cast-in-place concrete supports or anchors.
   2. Install piping with 66-inch minimum cover.
   3. Install ductile-iron pressure piping according to AWWA C600 or AWWA M41.
   4. Install ductile-iron special fittings according to AWWA C600.
   5. Install PVC pressure piping according to AWWA M23, or ASTM D 2774 and ASTM F 1668.
   6. Install PVC water-service piping according to ASTM D 2774 and ASTM F 1668.

H. Install corrosion-protection piping encasement over the following underground metal piping according to ASTM A 674 or AWWA C105:
   1. Ductile-iron pipe and fittings.
   2. Expansion joints and deflection fittings.

3.3 PIPE JOINT CONSTRUCTION

A. Join gravity-flow, nonpressure drainage piping according to the following:
   1. Join ductile-iron culvert piping according to AWWA C600 for push-on joints.
   2. Join ductile-iron piping and special fittings according to AWWA C600 or AWWA M41.

3. Join corrugated steel sewer piping according to ASTM A 798/A 798M.
4. Join ABS sewer piping according to ASTM D 2321 and ASTM D 2751 for elastomeric-seal joints.
5. Join corrugated PE piping according to ASTM D 3212 for push-on joints.
6. Join PVC corrugated sewer piping according to ASTM D 2321 for elastomeric-seal joints.
7. Join PVC sewer piping according to ASTM D 2321 and ASTM D 3034 for elastomeric-seal joints or ASTM D 3034 for elastomeric-gasketed joints.
8. Join nonreinforced-concrete sewer piping according to ASTM C 14 and ACPA's "Concrete Pipe Installation Manual" for rubber-gasketed joints.
9. Join reinforced-concrete sewer piping according to ACPA's "Concrete Pipe Installation Manual" for rubber-gasketed joints.
10. Join dissimilar pipe materials with nonpressure-type flexible couplings.

B. Join force-main pressure piping according to the following:
1. Join ductile-iron pressure piping according to AWWA C600 or AWWA M41 for push-on joints.
2. Join ductile-iron special fittings according to AWWA C600 or AWWA M41 for push-on joints.
3. Join PVC pressure piping according to AWWA M23 for gasketed joints.
4. Join PVC water-service piping according to ASTM D 2855 for solvent-cemented joints.
5. Join dissimilar pipe materials with pressure-type couplings.

3.4 BACKWATER VALVE INSTALLATION

A. Install horizontal-type backwater valves in piping where indicated.

B. Install combination horizontal and manual gate-valve type in piping and in manholes where indicated.

C. Install terminal-type backwater valves on end of piping and in manholes where indicated.

3.5 CLEANOUT INSTALLATION

A. Install cleanouts and riser extensions from sewer pipes to cleanouts at grade. Use cast-iron soil pipe fittings in sewer pipes at branches for cleanouts and cast-iron soil pipe for riser extensions to cleanouts. Install piping so cleanouts open in direction of flow in sewer pipe.
1. Use Light-Duty, top-loading classification cleanouts in earth or unpaved foot-traffic
2. Use Medium-Duty, top-loading classification cleanouts in paved foot-traffic areas.
3. Use Heavy-Duty, top-loading classification cleanouts in vehicle-traffic service areas.
4. Use Extra-Heavy-Duty, top-loading classification cleanouts in roads.

B. Set cleanout frames and covers in earth in cast-in-place concrete block, 18 by 18 by 12 inches deep. Set with tops 1 inch above surrounding earth grade.

C. Set cleanout frames and covers in concrete pavement and roads with tops flush with pavement surface.

3.6 MANHOLE INSTALLATION

A. General: Install manholes, complete with appurtenances and accessories indicated.

B. Install precast concrete manhole sections with sealants according to ASTM C 891.

C. Where specific manhole construction is not indicated, follow manhole manufacturer's written instructions.

D. Set tops of frames and covers flush with finished surface of manholes that occur in pavements. Set tops 3 inches above finished surface elsewhere unless otherwise indicated.

3.7 CATCH BASIN INSTALLATION

A. Construct catch basins to sizes and shapes indicated.

B. Set frames and grates to elevations indicated.

3.8 STORMWATER INLET AND OUTLET INSTALLATION

A. Construct inlet head walls, aprons, and sides of reinforced concrete, as indicated.

B. Construct riprap of broken stone, as indicated.

C. Install outlets that spill onto grade, anchored with concrete, where indicated.

D. Install outlets that spill onto grade, with flared end sections that match pipe, where indicated.

E. Construct energy dissipaters at outlets, as indicated.

3.9 CONCRETE PLACEMENT

A. Place cast-in-place concrete according to ACI 318.

3.10 CHANNEL DRAINAGE SYSTEM INSTALLATION

A. Install with top surfaces of components, except piping, flush with finished surface.

B. Assemble channel sections to form slope down toward drain outlets. Use sealants, adhesives, fasteners, and other materials recommended by system manufacturer.

C. Embed channel sections and drainage specialties in 4-inch minimum concrete around bottom and sides.

D. Fasten grates to channel sections if indicated.

E. Assemble channel sections with flanged or interlocking joints.

F. Embed channel sections in 4-inch minimum concrete around bottom and sides.

3.11 CONNECTIONS

A. Make connections to existing piping and underground manholes.
   1. Use commercially manufactured wye fittings for piping branch connections. Remove section of existing pipe; install wye fitting into existing piping; and encase entire wye fitting, plus 6-inch overlap, with not less than 6 inches of concrete with 28-day compressive strength of 3000 psi.
   2. Make branch connections from side into existing piping, NPS 4 to NPS 20. Remove section of existing pipe, install wye fitting into existing piping, and encase entire wye with not less than 6 inches of concrete with 28-day compressive strength of 3000 psi.
   3. Make branch connections from side into existing piping, NPS 21 or larger, or to underground manholes and structures by cutting into existing unit and creating an opening large enough to allow 3 inches of concrete to be packed around entering connection. Cut end of connection pipe passing through pipe or structure wall to conform to shape of and be flush with inside wall unless otherwise indicated. On outside of pipe, manhole, or structure wall, encase entering connection in 6 inches of concrete for minimum length of 12 inches to provide additional support of collar from connection to undisturbed ground.
      a. Use concrete that will attain a minimum 28-day compressive strength of 3000 psi unless otherwise indicated.
      b. Use epoxy-bonding compound as interface between new and existing concrete and piping materials.
   4. Protect existing piping, manholes, and structures to prevent concrete or debris from entering while making tap connections. Remove debris or other extraneous material that may accumulate.

B. Pipe couplings, expansion joints, and deflection fittings with pressure ratings at least equal to piping rating may be used in applications below unless otherwise indicated.
   1. Use nonpressure-type flexible couplings where required to join gravity-flow, nonpressure sewer piping unless otherwise indicated.
      a. Ring-type flexible couplings for piping of different sizes where annular space between smaller piping's OD and larger piping's ID permits installation.
   2. Use pressure-type pipe couplings for force-main joints.

3.12 CLOSING ABANDONED STORM DRAINAGE SYSTEMS

A. Abandoned Piping: Close open ends of abandoned underground piping indicated to remain in place. Include closures strong enough to withstand hydrostatic and earth pressures that may result after ends of abandoned piping have been closed. Use either procedure below:
   1. Close open ends of piping with threaded metal caps, plastic plugs, or other acceptable methods suitable for size and type of material being closed. Do not use wood plugs.

B. Abandoned Manholes and Structures: Excavate around manholes and structures as required and use one procedure below:
   1. Remove manhole or structure and close open ends of remaining piping.
   2. Remove top of manhole or structure down to at least 36 inches below final grade. Fill to within 12 inches of top with stone, rubble, gravel, or compacted dirt. Fill to top with concrete.

C. Backfill to grade according to Section 312000 "Earth Moving."

3.13 IDENTIFICATION

A. Materials and their installation are specified in Section 312000 "Earth Moving." Arrange for installation of green warning tape directly over piping and at outside edge of underground structures.
   1. Use detectable warning tape over ferrous piping.
   2. Use detectable warning tape over nonferrous piping and over edges of underground structures.

3.14 FIELD QUALITY CONTROL

A. Inspect interior of piping to determine whether line displacement or other damage has occurred. Inspect after approximately 24 inches of backfill is in place, and again at completion of Project.
   1. Submit separate reports for each system inspection.
   2. Defects requiring correction include the following:
      a. Alignment: Less than full diameter of inside of pipe is visible between structures.
      b. Deflection: Flexible piping with deflection that prevents passage of ball or cylinder of size not less than 95 percent of piping interior diameter. The maximum recommended installed deflection is 7.5% of the inside diameter of pipe at not less than 30 days following installation
      c. Damage: Crushed, broken, cracked, or otherwise damaged piping.
      d. Infiltration: Water leakage into piping.
      e. Exfiltration: Water leakage from or around piping.
   3. Replace defective piping using new materials, and repeat inspections until defects are within allowances specified.
   4. Reinspect and repeat procedure until results are satisfactory.

B. Test new piping systems, and parts of existing systems that have been altered, extended, or repaired, for leaks and defects.
   1. Do not enclose, cover, or put into service before inspection and approval.
   2. Schedule tests and inspections by authorities having jurisdiction with at least 24 hours' advance notice.
   3. Submit separate report for each test.
   4. Visual Inspection:
      a. Inspect all gravity sewer pipe installed to verify alignment and ensure the pipe is free from obstructions and debris. Use sun light and mirrors to “flash” the sewer pipe one section at a time. When the full diameter of the pipe is visible between manholes, the segment of piping is deemed properly aligned and free of sags and debris. If the segment of pipe fails the visual inspections the pipe shall be cleaned and/or replaced and re-tested.
   5. Deflection Test:
      a. A Deflection test shall be required for all plastic sewer piping installed. A GO-NO-GO Mandrel shall be pulled through the pipe a minimum of 30 days after the final placement of backfill and superimposed loads. The deflection of the sewer pipe shall not exceed 7.5 percent when tested with a mandrel specifically designed for the type and size of pipe installed. Pipe segments failing the Mandrel test shall be removed and replaced.
   6. Low Pressure Air Test:
      a. Test plastic piping according to ASTM F 1417.
      b. Test concrete piping according to ASTM C 924.

C. Leaks and loss in test pressure constitute defects that must be repaired.

D. Replace leaking piping using new materials, and repeat testing until leakage is within allowances specified.

3.15 CLEANING

A. Clean interior of piping of dirt and superfluous materials. Flush with water.

END OF SECTION 334100